This is a digital copy of a book that was preserved for generations on library shelves before it was carefully scanned by Google as part of a project to make the world's books discoverable online.

It has survived long enough for the copyright to expire and the book to enter the public domain. A public domain book is one that was never subject to copyright or whose legal copyright term has expired. Whether a book is in the public domain may vary country to country. Public domain books are our gateways to the past, representing a wealth of history, culture and knowledge that's often difficult to discover.

Marks, notations and other marginalia present in the original volume will appear in this file - a reminder of this book's long journey from the publisher to a library and finally to you.

Usage guidelines

Google is proud to partner with libraries to digitize public domain materials and make them widely accessible. Public domain books belong to the public and we are merely their custodians. Nevertheless, this work is expensive, so in order to keep providing this resource, we have taken steps to prevent abuse by commercial parties, including placing technical restrictions on automated querying.

We also ask that you:

+ *Make non-commercial use of the files* We designed Google Book Search for use by individuals, and we request that you use these files for personal, non-commercial purposes.

+ *Refrain from automated querying* Do not send automated queries of any sort to Google's system: If you are conducting research on machine translation, optical character recognition or other areas where access to a large amount of text is helpful, please contact us. We encourage the use of public domain materials for these purposes and may be able to help.

+ *Maintain attribution* The Google "watermark" you see on each file is essential for informing people about this project and helping them find additional materials through Google Book Search. Please do not remove it.

+ *Keep it legal* Whatever your use, remember that you are responsible for ensuring that what you are doing is legal. Do not assume that just because we believe a book is in the public domain for users in the United States, that the work is also in the public domain for users in other countries. Whether a book is still in copyright varies from country to country, and we can't offer guidance on whether any specific use of any specific book is allowed. Please do not assume that a book's appearance in Google Book Search means it can be used in any manner anywhere in the world. Copyright infringement liability can be quite severe.

About Google Book Search

Google's mission is to organize the world's information and to make it universally accessible and useful. Google Book Search helps readers discover the world's books while helping authors and publishers reach new audiences. You can search through the full text of this book on the web at http://books.google.com/

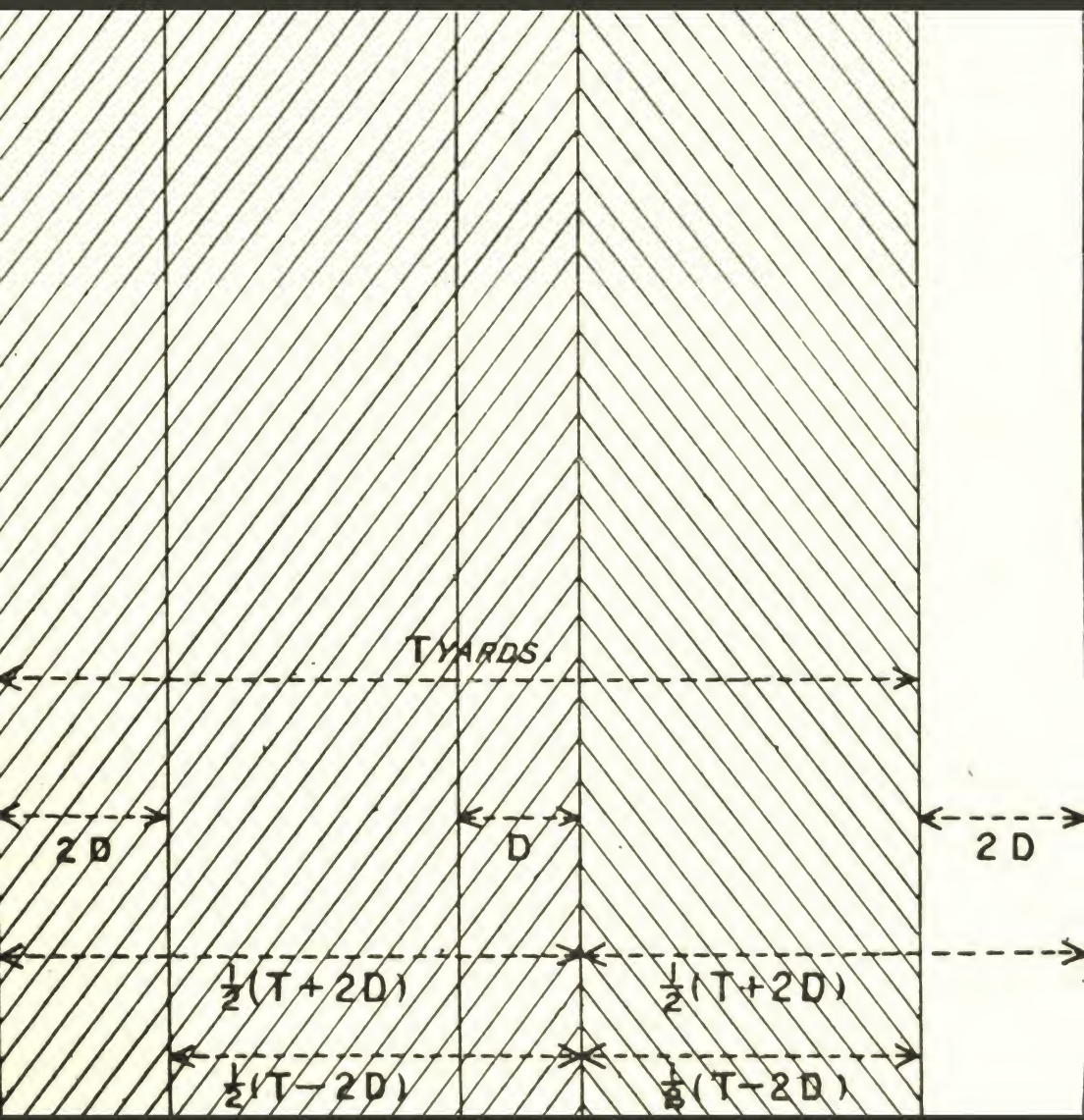

Text book of gunnery

Ordnance College (Great Britain)

MILITARY BOOKS.

Published by Authority.

LONDON:
PRINTED FOR HIS MAJESTY'S STATIONERY OFFICE.

And to be purchased, either directly or through any Bookseller, from
WYMAN AND SONS, LTD., FETTER LANE, E.C.; or
OLIVER AND BOYD, EDINBURGH; or
E. PONSONBY, 116, GRAFTON STREET, DUBLIN.

ARMY REGULATIONS:—

PAY, APPOINTMENT, PROMOTION, AND NON-EFFECTIVE PAY OF THE ARMY. Royal Warrant. 1900. Price 1*s.* (*Out of print.*)

ALLOWANCES OF THE ARMY. Regns. 1903. Price 1*s.*

CLOTHING OF THE ARMY. Regns. Part I. Regular Forces. 1904. Price 1*s.* Part II. Militia. 1904. Price 6*d.*

DRESS REGNS. FOR OFFICERS OF THE ARMY (including the Militia). 1904. Price 3*s.* 6*d.*

EQUIPMENT OF THE ARMY. Regns. Part 1. 1902. Price 1*s.*

Part 2. Details:—Sections—I. Infantry. 1904. Price 4*d.* II. Cavalry. 1905. Price 6*d.* III. Army Service Corps. 1904. Price 3*d.* IV. and IV*a.* Army Ordnance Corps. Army Pay Corps. 1904 Price 2*d.* V. Army Medical Corps. 1903. Price 2*d.* VI.–IX. Colleges and Prisons. 1898. Price 2*d.* VIIc. Training Schools Depôt, R.A.M.C. 1902. Price 2*d.* X. Engineers. 1902. Price 6*d.* XI. (*a*) Horse Artillery, with B.L. 12-pr. 6 cwt. 1904. Price 6*d.* (*b*) Field Artillery, with Q.F. 15-pr. 1904. Price 6*d.* (*c*) Field Artillery, with B.L. 15-pr. 1904. Price 6*d.* (*d*) Field Artillery, with B.L. 5-inch Howitzer. 1904. Price 6*d.* (*e*) Horse and Field Artillery Staff and Depôts, with 12-pr. 6 cwt. and B.L. 15-pr. 1904. Price 6*d.* XII*a.* Garrison Artillery. Price 2*s.* 6*d.* XII*c.* Heavy Artillery Brigade. 1905. Price 6*d.* XIII. Staff Units in Time of War. Price 2*d.* XIV. and XV. Remount Depôt at Base. Mounted and Dismounted Company of Signallers in Time of War. 1904. Price 2*d.* XVI. Militia. 1905. Price 6*d.* XVII. Yeomanry. 1903. Price 6*d.* XVIII. Volunteers. 1905. Price 6*d.*

EQUIPMENT. INSTRUCTIONS FOR FITTING AND WEARING BANDOLIER, Pattern 1903. Price 2*d.*

KING'S REGNS. AND ORDERS FOR THE ARMY. Provisional Edition 1904. Price 1*s.* 6*d.*

MILITIA REGNS. (Provisional.) 1904. Price 1*s.*

ORDNANCE COLLEGE REGNS. 1904. Price 1*s.* 6*d.*

ORDNANCE SERVICES. ARMY. Regns. (Provisional.) 1904. Price 1*s.*

RECRUITING FOR THE REGULAR ARMY, MILITIA, AND IMPERIAL YEOMANRY. Regns. for. 1903. Price 6*d.*

VETERINARY SERVICES, ARMY. Regns. 1900. Price 6*d.*

ARMY SERVICE CORPS:—

TRAINING. (Provisional.) 1903. Price 1*s.*

STANDING ORDERS. 1895. Price 1*s.* 6*d.*

SUPPLY, HANDBOOK FOR. Price 1*s.* 6*d.*

ARMY ORDERS. General Orders, Regulations, and Instructions promulgated to the Army. Monthly. Price 3*d.* Covers for ditto. Price 9*d.*

WAR OFFICE LIST. 1903. *Sold by Harrison & Sons, 45, Pall Mall, S.W. Price 5s. net.*

(Wt. 29469 3000 3 | 07—H & S 7647)

Digitized by Google

MILITARY BOOKS, published by Authority—continued.

ARMOURERS. Instructions for. 1904. Price 1*s.* 6*d.*
CAVALRY TRAINING. (Provisional.) 1904. Price 1*s.*
YEOMANRY. IMPERIAL. TRAINING. 1905. Instructions. Price 1*d.*
Do. Do. REGULATIONS. 1903. Price 1*s.*

THE NEW YORK PUBLIC LIBRARY
REFERENCE DEPARTMENT

This book is under no circumstances to be taken from the Building

JUL 16 1915
JUL 17 1915
JUL 18 1915
SEP 1 1915
NOV 1 1915
JAN 22 1916
APR 1 8 1916

form 419

INFANTRY TRAINING. 1905. Price 1*s.*
INFANTRY. MOUNTED. TRAINING. 1904. (Provisional.) Price 6*d.*
INTELLIGENCE DUTIES IN THE FIELD. Regns. for. 1904. Price 2*d.*
RIFLE RANGES. Miniature and Safety. Instructions for. Price 3*d.*
Do. Do. Care and Construction of. Do. Price 3*d.*
ANTI-TYPHOID INOCULATION COMMITTEE. Report. Price 1*s.* 6*d.*
BARRACKS. Manual of Instructions in Care of. 1901. Price 9*d.*
COMMISSIONS IN H.M. REGULAR FORCES. Short Guide to. Price 4*d.*
COMMANDS AND STAFF IN THE UNITED KINGDOM. A.O., Jan. 6, 1905. Price 6*d.*
COOKING. MILITARY. Manual of. 1904. Price 6*d.*

Digitized by Google

MILITARY BOOKS, published by Authority—continued.

MILITIA. Regns. for. 1904. (Provisional.) Price 1*s.*
MUSKETRY REGNS. 1905. Price 1*s.*
MUSKETRY EXERCISES. (Provisional.) 1904. Price 3*d.*
ORDNANCE CORPS. ARMY. Standing Orders. 1903. Price 6*d.*
ORDNANCE SERVICES. ARMY. Regns. for. 1902. Price 1*s.*
ORDNANCE. SERVICE. Treatise on. 6th Edition. 1904. Price 10*s.*
PROJECTION. Linear Perspective. Text Book for R.M. Academy. In two parts. Price 6*s.*
RAILWAYS DURING THE WAR IN SOUTH AFRICA, 1899-1902. Price 4*s.*
VOLUNTEER CORPS. Purchase of Land by. 1893. Price 2*d.*
VOLUNTEER FORCE. Regns. for. 1901. Amended to July, 1904. Price 1*s.*
VOLUNTEERS in Brigade and Regimental Camps, or when encamped with the Regular Forces. Orders and Instructions for. Revised May, 1902. Price 1*d.*
STEAM ENGINES AND BOILERS. Notes on the Management of. 1899. Price 1*d.*
DERRICKS, SHEERS, and HOLDFASTS. 1898. Price 9*d.*
TRUMPET AND BUGLE SOUNDS for the Army. 1903. Price 1*s.*
GUNNERY: Text Book of. 1902. Price 3*s.*
GUNNERY TABLES. Collected and compiled by Major G. MACKINLAY, R.A. for the Text Book of Gunnery, 1887. 48 pp. Price 2*s.* 6*d.*
GUNS: Handbooks for, viz.:—

64-PR. R.M.L. of 64 cwt. (Marks I., II., III.) Land Service. 1900. Price 1*s.* 3*d.*
64-PR. ,, Converted of 58 and 71 cwt. 1902. Price 9*d.*
40-PR. ,, of 32 & 35 cwt. 1899. Price 6*d.*
20-PR. R.B.L., of 16 cwt., on Travelling Carriage. (Movable Armament and Volunteer Batteries of Position.) 1898. Price 1*s.*
16-PR. R.M.L. of 12 cwt. 1903. Price 1*s.*
15-PR. B.L. (Mark I.) (Field Batteries.) 1904. Price 1*s.*
15-PR. ,, (Marks II.—IV.) and Carriage Wagon and Limber. Mark IV. (Field Batteries). 1904. Price 1*s.* 6*d.*
13-PR. R.M.L. of 8 cwt. (Movable Armament.) 1900. Price 1*s.*
12½-PR. Q.F. (Movable Armament.) 1903. Price 9*d.*
12-PR. of 12 cwt. A.Q.F. (Land Service.) 1903. Price 1*s.* 6*d.*
12-PR. B.L. (Marks I.—IV.) of 6 cwt., and Carriages (Marks I.* and II.). Horse Artillery. 1905. Price 1*s.*
10-PR. Jointed B.L. (Mule Equipment.) 1904. Price 1*s.*
6-PR. HOTCHKISS Q.F. (Land Service.) 1903. Price 6*d.*
3-PR. ,, ,, ,, 1903. Price 6*d.*
6-PR. NORDENFELT Q.F. (Land Service.) Price 1*s.*
3-PR. ,, ,, 1903. Price 9*d.*
12·5-inch R.M.L. 38 ton. (Marks I. and II.) Land Service. 1904. Price 1*s.* 6*d.*
12-inch B.L. (Land Service.) 1904. Price 2*s.*
10-inch R.M.L. 1903. Price 1*s.* 6*d.*
10-inch B.L. Land Service. 1904. Price 2*s*
9·2-inch (Land Service.) 1902. Price 2*s.* 6*d.*
8-inch R.M.L. Howitzer of 70 cwt. For Movable Armaments and Armaments of Works. Land Service. 1901. Price 2*s.*
6-inch Q.F. Land Service. 1903. Price 1*s.*
6-inch B.L. and B.L.C. Land Service. 1904. Price 1*s.* 6*d.*
6-inch B.L. Howitzer of 30 cwt. (Mark I.). 1904. Price 1*s.*
6-inch ,, Howitzer of 25 cwt. (Mark I.). Price 3*s.*
5·4-inch ,, Howitzer (Mark I.). 1902. Price 1*s.* 6*d.*
5-inch ,, Howitzer. 1903. Price 1*s.*
5-inch ,, (Marks I. to V.) Land Service. 1904. Price 9*d.*
4·7-inch Q.F. (Fixed Armaments.) Land Service. 1904. Price 1*s.*
4·7-inch Q.F.B. (Mark IV.*) on Travelling Carriage. Land Service. 1904. Price 1*s.*
4-inch B.L. Marks V. and VI. Land Service. 1904. Price 1*s.*
2·95-inch Q.F. Mountain Gun. (Mark I.). Mule Equipment. 1901. Price 3*s.*
0·303-inch and ·303-inch Converted Maxim Machine Gun. (Magazine Rifle Chamber.) 1903. Price 1*s.*

Digitized by Google

[*All Rights Reserved.*]

40185
7406

[COMPILED AT THE ORDNANCE COLLEGE, WOOLWICH.]

TEXT BOOK

OF

GUNNERY.

PART I.

LONDON:
PRINTED FOR HIS MAJESTY'S STATIONERY OFFICE,
BY HARRISON AND SONS, ST. MARTIN'S LANE,
PRINTERS IN ORDINARY TO HIS MAJESTY.

And to be purchased, either directly or through any Bookseller, from
WYMAN AND SONS, LTD., FETTER LANE, E.C.; or
OLIVER AND BOYD, TWEEDDALE COURT, EDINBURGH; or
E. PONSONBY, 116, GRAFTON STREET, DUBLIN.

1907.

Price Two Shillings and Threepence.

Digitized by Google

THE NEW YORK
PUBLIC LIBRARY
366728
ASTOR, LENOX AND
TILDEN FOUNDATIONS.
R 190[illegible] L

ERRATA AND ADDITIONS.

---

1. Page 17, line 27, *read* is for as.
2. Page 47, line 14, *read* 1·24 for 1·4.
3. Page 149, line 8, *read* 91·5 for 9·15.
4. Page 160, line 14, *insert* P_2.
5. Page 164, last three lines, *read* P_0 for p_0, and insert P_0 before second equation mark in last two lines.
6. Page 165, lines 6, 7, 8 *to read* $T_0 - P_0$ for $t_0 - p_0$, and P_1, P_2, P_3 for p_1, p_2, p_3, respectively. *Dele* "Fig. 8."
7. Fig. 11, facing page 165, should be marked Fig. 9 instead of Fig. 11.
8. Page 166, *dele* "Fig. 9," also move up the letter press and diagrams.
9. Page 175, *dele* "Fig. 13."
10. Page 176, *dele* "Fig. 14" and "Fig. 15," and move up the letter press.
11. Page 177, line 2, *read* r^2 instead of r.
12. Page 178, lines 14 and 16, *read* $\frac{r_2}{r - r_0} + \frac{r_2}{r + r_0}$ instead of $\frac{r_2}{r - r_0} + \frac{r_2}{r - r_0}$.
13. Page 191, *add* at end of page—

    The range being 2,000 yards, this amounts to $1146 \frac{4\frac{1}{2}}{2000} = 2{\cdot}58$ minutes of deflection required for the 6-inch projectile.

    and $1146 \frac{37\frac{1}{2}}{2000} = 21{\cdot}5$ minutes deflection required for the rifle bullet.

(Wt. 29469 3000 7 | 07—H & S 1591)

Digitized by Google

PART I.

CONTENTS.

	Page.
Chapter I.—Definitions and Units	3
„ II.—Exterior Ballistics—	
1. Construction of Ballistic Tables	8
2. Application of the Ballistic Tables ..	20
3. Compilation of Range Tables	46
4. Unresisted Motion of a Projectile	68
„ III.—Accuracy—	
1. Laying	72
2. Probability of Fire	91
„ IV.—Internal Ballistics—	
1. Work realised in the Bore of a Gun ..	112
2. Measurement of Velocity	128
3. Recoil	139
„ V.—Principles of Gun Construction—	
1. Theory of the Strain in Gun Construction	151
2. The Rifling of Guns	182
3. Drift and Wind Deflection	188
Gunnery Tables	193
Appendix on Perforation of Armour Plates	242

Stevens Sept. 19, 1907 2/3

Digitized by Google

ABBREVIATIONS.

B.L.	Breech-Loading (applied to modern ordnance).
C.	Centigrade.
C.G.	Centre of gravity.
cm.	Centimètre.
D. of A.	Director of Artillery.
F.	Fahrenheit.
f/s.	Feet per second.
g	Gramme.
G.D.	Gravimetric density.
G.V.	Gravimetric volume.
Inst. C.E. ..	Institution of Civil Engineers.
kg.	Kilogramme.
m.	Mètre.
mm.	Millimètre.
M.H.	Martini-Henry rifle.
L.M.	Lee-Metford Magazine rifle.
M.V.	Muzzle velocity.
Phil. Trans. ..	Philosophical Transactions of the Royal Society.
Proc. R.A.I. ..	Proceedings of the Royal Artillery Institution.
Proc. R.S. ..	Proceedings Royal Society.
Q.D.	Quadrant depression.
Q.E.	Quadrant elevation.
R.B.L.	Rifled Breech-Loading (applied to old type guns).
R.C.D.	Royal Carriage Department.
R.G.F.	Royal Gun Factory.
R.L.	Royal Laboratory.
R.M.L.	Rifled Muzzle-Loading.
R.U.S.I... ..	Royal United Service Institution.
R.V.	Remaining velocity.
T.E.	Tangent elevation.

Digitized by Google

TEXT BOOK OF GUNNERY.

PART I.

In the following pages of Part I (after the definitions have been given) the subject of Gunnery is considered in the order which naturally suggests itself, in the two parts in which it may be divided.

First, Exterior Ballistics, in which the motion of the projectile is considered after it has received its initial velocity of projection, and the projectile is moving freely under the influence of gravity and the resistance of the air, and it is required to determine the conditions so as to hit a certain object.

Secondly, Interior Ballistics, in which the pressure of the powder gas in the bore of the gun is analysed, and the investigation carried out of the requisite charge of powder to secure the initial velocity of the projectile; and in which the calculations are made of the strength of the various parts of the gun required to withstand the pressure at all parts of the bore.

The more mathematical parts of gunnery are resumed and completed in Part II.

Digitized by Google

Fig. 1.

Digitized by Google

CHAPTER I.—DEFINITIONS AND UNITS.

The **axis of the piece** is the straight line passing down the centre line of the bore.

The **axis of the trunnions** is the straight line passing through the centre of the trunnions, at right angles to the axis of the piece.

The **calibre** is the diameter of the bore in inches measured across the lands.

The **line of sight** is the straight line passing through the sights of the piece and the point aimed at.

The **angle of sight** is the angle which the line of sight makes with the horizontal plane (S, fig. 1).

When the line of sight slopes downwards, as in fig. 1, A, for instance, in firing at a sea-target, the angle of sight is usually called the **Angle of Depression.**

The **line of departure** is the direction in which the shot is moving on leaving the gun; or, in other words, a tangent to the trajectory at the muzzle.

The **angle of departure** is the angle which the line of departure makes with a horizontal plane (D, fig. 1).

The **trajectory** is the curve described by the C.G. (centre of gravity) of the shot in flight (*i.e.*, the curved line GT in fig. 1, A, B).

Range is the distance GT from the muzzle of the gun G to the intersection T of the trajectory with the line of sight.

The **plane of sight and departure** is the vertical plane passing through the lines of sight and departure respectively.

Drift is the deflection of the projectile from the vertical plane of departure due to the rotation imparted by the rifling of the gun. It is sometimes termed Deviation.

The **quadrant angle** is the angle (Q, fig. 1) which the axis of the piece, when laid, makes with the horizontal plane.

It is termed quadrant *elevation* or *depression* (Q.E. or Q.D.), according as the piece is laid above or below the horizontal plane; the term *depressed fire* means that a piece is fired at a quadrant angle of depression (Q.D.).

The **angle of tangent elevation** (T.E.), is the angle between the axis of the gun and the line of sight (T, fig. 1).

F is the point of the foresight and B is the backsight when the gun's axis is horizontal and laid point blank (see p. 4).

With centre F and radius FB ($= r$ inches) describe an arc BC′D′ and draw BCD a tangent to the arc. If the angle BFC′ = 15° and FC′ be produced to C, then BC subtends an angle of 15° at the foresight, and on the backsight 15° will be marked at C, because BC subtends 15° at F; the backsight BCD is generally called the tangent sight.

Suppose 15° of tangent elevation is given to the gun, it means

Digitized by Google

that the tangent scale is elevated up by a length BC which subtends 15° at F; and similarly for any other angle of tangent elevation.

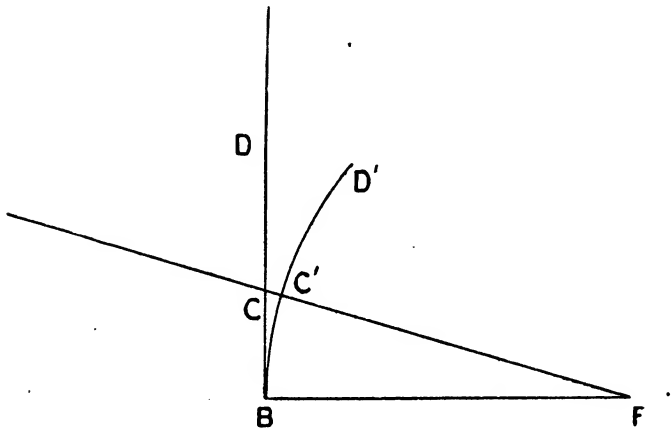

The angle (S) made by the line of sight with the horizon must be added or subtracted to obtain the *quadrant angle* of elevation or depression from the *tangent angle*; subtracted in fig. 1, A, added in fig. 1, B.

The **angle of projection** is the angle between the line of departure and the line of sight (P, fig. 1).

Jump is the angle between the line of departure and the axis of the gun before firing (J, fig. 1).

The **angle of descent** is the angle which a tangent to the trajectory at the point of impact makes with the line of sight (β, fig. 1).

The **angle of arrival** is the angle which a tangent to the trajectory makes with the horizontal plane (ω, fig. 1).

The **angle of incidence** is the angle which a tangent to the trajectory at the point of impact makes with the normal to the surface struck (i, fig. 1).

Angles are measured in *degrees* and *minutes*, the circumference being divided into 360° (degrees), and each degree into 60′ (minutes).

A watch face will serve as a protractor, for measuring angles, each minute of time on the face being 6° of angle, and each hour is 30° of angle.

Angular velocity is measured always in *radians per second;* the *radian* is the name given to the unit of circular measure, an angle subtended by an arc equal to the radius; the radian is thus

$$180 \div \pi = 57°{\cdot}3, \text{ or } 3438'.$$

$$\therefore 1 \text{ minute} = \tfrac{1}{3438} \text{ of a radian.}$$

Thus, to turn degrees or minutes of angle into radians of circular measure, divide by 57·3 or 3438.

If the line of sight GT in fig. 1, A, slopes down at an angle of sight of S minutes at a range GT of R yards, in consequence of the gun G being h feet above the horizontal line OT through the target T, then, since GO = h feet and GT = R yards = 3R· feet.

Digitized by Google

$\text{Sin S} = \frac{h}{3R}$:

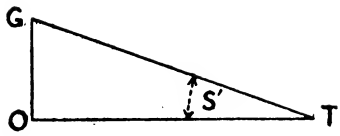

When the angle of sight is small, sin S can be replaced by the circular measure of S′ or by S ÷ 3438; and then

$$\frac{S}{3438} = \frac{h}{3R}, \text{ or } S = 1146\frac{h}{R},$$

the depression-range-finding (D.R.F.) formula, of frequent use in the sequel.

So also for a line of sight sloping upwards as in fig. 1, B.

The gunner's rule that an "inch at 100 yards subtends a minute," and so on in proportion, is equivalent to replacing the number 1146 by 1200, which makes the radian 60° instead of 57°·3, and makes the circumference of a circle three times the diameter.

The following examples may help to define these angles:—

Example 1.—Firing out to sea at a range of 3,000 yards from a battery 300 feet high, the angle of depression

$$S = 1146\frac{300}{3000} = 114'{\cdot}6 = 1° 55'.$$

In the Range Table the angle of elevation is given as 2° 20′, with a jump of + 7′; then (fig. 1, A)

T (tangent elevation) = 2° 20′;
P (angle of projection) = T + J = 2° 27′
D (angle of departure) = P − S = 0° 32′
Q (quadrant elevation) = D − J = 0° 25′.

If the angle of descent is given in the Range Table as 2° 50′, then

β (angle of descent) = 2° 50′,
ω (angle of arrival) = β + S = 4° 45′.

Example 2.—If the angle of tangent elevation is 2° 20′, quadrant angle 4° 15′, and jump 7′, find the angles of departure, of sight, and of projection.

From the definitions and from fig. 1, B,

D (angle of departure) = quadrant angle + jump
= 4° 15′ + 7′
= 4° 22′,
S (angle of sight) = quadrant angle − angle of elevation
= 4° 15′ − 2° 20′
= 1° 55′,
P (angle of projection) = angle of elevation + jump
= 2° 20′ + 7′
= 2° 27′.

Dangerous space is the horizontal distance in which the trajectory would catch a given vertical target; *e.g.*, a shell with a slope of

Digitized by Google

descent of 1 in 10 would catch the broadside of a ship 20 feet out of the water over a distance of 200 feet, which is thus the dangerous space.

Muzzle velocity is the velocity of a projectile on leaving the muzzle, in feet per second; abbreviated in writing to f/s.

Remaining velocity is the velocity at any point of the trajectory.

Striking velocity is the velocity at the point of impact.

PHYSICAL DEFINITIONS.

Force is that which produces, tends to produce, or prevents motion in a body.

The unit of force employed in gunnery is the attraction of the earth on one pound or one ton.

Strictly speaking, it is the tension of a thread or rope, supporting one pound or one ton, thus allowing for a slight discount in the attraction of the earth due to its rotation. This unit of force is a statical or gravitational unit, and it changes slightly, but quite inappreciably for our purposes, for different places on the earth's surface.

Stress is the action of balancing forces; it is estimated in units of force per unit area, generally in pounds or tons per square inch, abbreviated in writing to lb/in.^{2} or tons/in.^{2}

Pressure is a stress tending to prevent the approach of two bodies together.

Tension is a stress tending to prevent the separation of two bodies.

Total thrust or pull P is the product of the stress p and the area A in square inches over which it acts, or

$$P = pA, \qquad p = P/A.$$

Strain is the deformation produced by stress.

Compression is the strain produced in a body by pressure.

Extension is the strain produced in a body by tension.

The **limit of elasticity** of a substance is the least stress producing permanent strain.

For any stress less than the elastic limit, the ratio of stress to strain is found practically to be constant; this ratio is called the **modulus of elasticity**, and denoted by the letter E or M.

$$\text{Thus } E = \frac{\text{stress}}{\text{strain}} = \frac{\text{pressure}}{\text{compression}}, \text{ or } \frac{\text{tension}}{\text{extension}},$$

according as the stress is a pressure or a tension, and E is measured in lbs/in.^{2} or tons/in.^{2} by the ratio of the change of dimension to the original dimension.

Digitized by Google

Under these circumstances, when the stress is removed the strain disappears, and the body returns to its original dimensions.

The **tenacity** of a substance is the breaking tension.

Elasticity and tenacity are expressed in tons on the square inch in practical work.

For gun-steel we may take the modulus of elasticity

$$M = 12{,}500 \text{ tons/in.}^2,$$

and the tenacity as about 34 to 44 tons/in.^{2}, but for the steel wire of a wire gun, the tenacity is as great as 100 tons/in.^{2}.

UNITS.

The **units** employed in gunnery are numerous; this is apt to lead to mistakes in calculations.

The **units of length** are—

Yards for ranges at practice, and in Hadcock's Table X.
Feet in Bashforth's tables, and in expressing the height of any point of the trajectory above plane, as, for instance, the position of the burst of a shell in the air.
Inches are used for calibres of ordnance, diameters of projectiles, and for the distances apart of the marks on the chronograph of Boulengé instrument.
Thousandths of an inch are employed in denoting the shrinkages given to the parts of a gun.

The *units of weight* are—

Tons, cwts., and lb., for ordnance.
Lb. and oz., for projectiles, powder charges, and bursting charges of shells.
Grains, for bullets and powder charges of machine guns and small arms. 7000 grains = 1 lb. avoirdupois.

The metric units of the mètre and kilogramme are universally employed in Continental works on gunnery.

Weight is given in kilogrammes; or in grammes for small weights, such as rifle bullets and charges of powder.

Range is given in mètres (m.), and velocity in mètres per second (m/s).

Work and energy are measured in kilogramme-mètres (kg.-m.), taking $g = 9{\cdot}81$, in mètre-second units.

The calibre of foreign guns is expressed in centimètres (cm.) or millimètres (mm.); and centimètres are converted into inches by multiplying by 0·4, or more accurately by 0·3937, while inches are converted into millimètres by multiplying by 25 or 25·4.

Thus a calibre of 12 centimètres is 4·7 inches, and the 75-mm. field gun and 7·5 mm. rifle have calibres of about 3 and 0·3 inches.

The conversion of other metric measures of length, weight, pressure, energy, velocity, &c., will be found in Table XII.

Digitized by Google

CHAPTER II.—EXTERIOR BALLISTICS. THE RESISTANCE OF THE AIR, AND THE USE OF THE BALLISTIC TABLES.

SECTION 1.—CONSTRUCTION OF THE BALLISTIC TABLES.

THE first careful experiments on the resistance of the air were carried out by Sir Isaac Newton (in 1687) on spheres of glass, filled with air, water, or mercury, of various weights and diameters, let fall from the dome of St. Paul's Cathedral.

It was assumed that the resistance was proportional to the square of the velocity and the square of the diameter, and then from an observation of the time occupied in falling a given height (220 feet in Newton's experiments in St. Paul's Cathedral) it is possible to infer the resistance of the air from a mathematical formula.

The experiments by Benjamin Robins, in 1743, with his Ballistic Pendulum (Chapter IV), confirmed Newton's results for slow motion, for instance, at velocity below 800 or 900 feet per second (f/s); but for swift motion and velocity above 1200 f/s, Robins found that the resistance of the air was about three times the amount given by Newton's experiments, if calculated on the assumption of the *quadratic* law of resistance, that is, taking the resistance as varying as the square of the velocity.

Later experiments by Hutton in 1775, and at Metz in 1820, carried out with cannon balls against a ballistic pendulum of large size, have also confirmed the law that the resistance of the air to a shot is proportional to the square of the diameter; but no simple mathematical law could be deduced from the experiments which would give the resistance at all velocities, both high and low.

The ballistic pendulum is nowadays partly superseded by electric screens and the chronograph, described in Chapter IV; the passage of the shot through the screens is recorded by an electric signal in the chronograph; the time occupied between the screens is read off, and the velocity and retardation of the shot can then be calculated, and thence the resistance of the air can be inferred.

Elaborate experiments of this nature were carried out by the Rev. F. Bashforth, B.D., in 1865–1870, and again in 1878–1879, and it is on these experiments that the value of the resistance of the air adopted in the construction of the Ballistic Tables has been obtained.

As in Newton's experiments, Mr. Bashforth found that the resistance of the air was proportional to the cross section or to the square of the diameter; so that if p denotes the resistance of the air to a 1-inch projectile, then the resistance to a d-inch projectile, is given by

$$d^2p \text{ pounds.}$$

The value of p in pounds, shown graphically in fig. 3, for projectiles of a standard shape fired under standard conditions is given in Table II for velocities ranging from 100 f/s to 2800 f/s, as deduced from Bashforth's experiments, embodied in the coefficient K given in Table I, the relation between p and K being

$$p = \frac{K}{g}\left(\frac{v}{1000}\right)^3.$$

Digitized by Google

The standard shape adopted in the experiments was that of the service elongated projectile of that period (1865–79), having a cylindrical body and a flat base, and an ogival head struck with a radius of one and a half calibres or diameters, as shown in fig. 1. Thus, take a shot whose diameter across the body is d inches, so that $AB = d''$.

Produce AB both ways, so that $AB' = BA' = \frac{d}{2}$.

Then $AA' = d + \frac{d}{2} = \frac{3d}{2} = BB'$.

With centre A′ and radius $AA' = \frac{3d}{2}$ describe the arc AC.

Similarly with centre B′ and radius BB′ describe the arc BC.

Then the shot CADEB is said to have an ogival head of one and a half calibres or diametres.

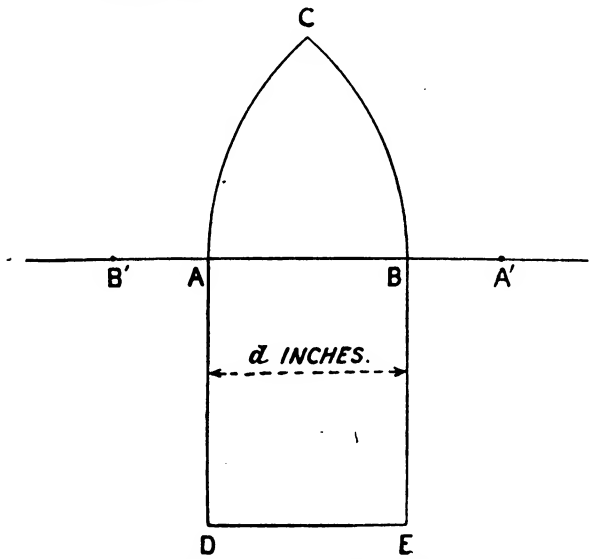

To allow for difference in shape, projectiles of the annexed form, shown in fig. 2, were experimented with, and it was found that the

Fig. 2.
Forms of Shot experimented with in 1866. in 1879.

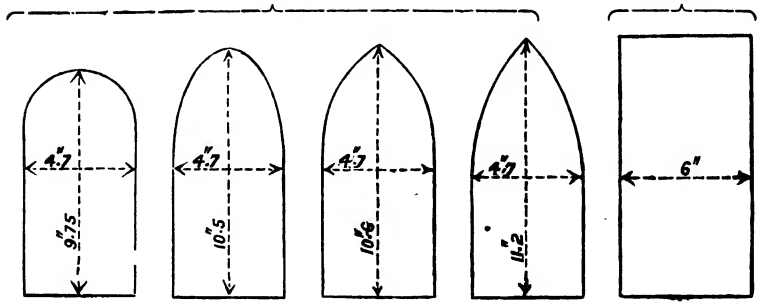

(1) Hemispherical head. (2) Hemispheroidal head. (3) Ogival head (1 diam.) (4) Ogival head (2 diams.) (5) Flat head.

Digitized by Google

Fig. 3.

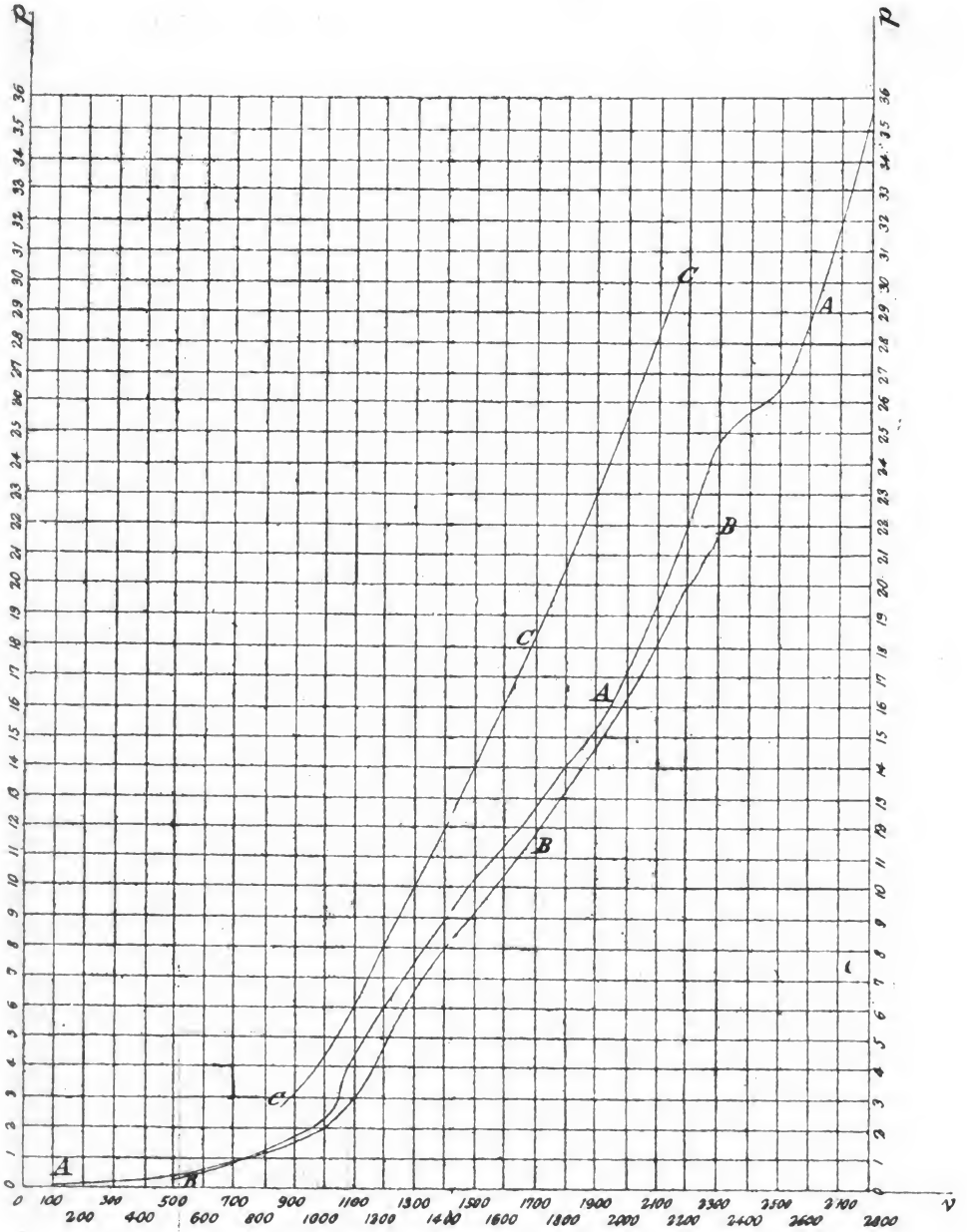

Diagram connecting v and p

Digitized by Google

Digitized by Google

To face p. 11.

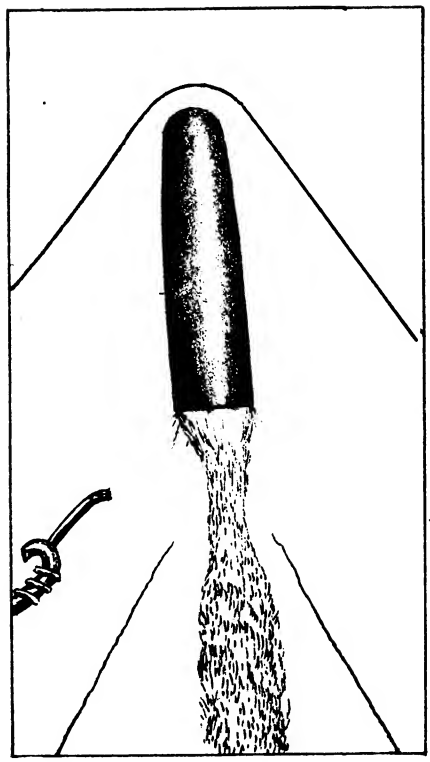

FIG. 4.

3.07

Weller & Grahams, Ltd Litho. London

Digitized by Google

resistance of the air could be represented by

$$\kappa d^2 p \text{ pounds,}$$

where κ is a factor depending on the shape of the head and smoothness of the surface, and κ is called the **coefficient of shape.**

Under ordinary conditions the value of κ may vary from 2 in flat headed proof projectiles, and 1·7 for spherical shot, to 0·95 for modern projectiles, and to 0·8 for the magazine rifle bullet.

With the improved steadiness in flight obtained with breech-loading it is found that the resistance is reduced by a factor, σ, called the **coefficient of steadiness,** so that the resistance becomes

$$\kappa\sigma d^2 p \text{ pounds.}$$

On the other hand, the coefficient σ may become greater than unity when the gun is worn, or the projectile imperfectly centered or rotated unsteadily.

Finally it was found that the resistance is proportional to the density of the air, so that if τ denotes the density referred to a certain standard density (534·22 grains per cubic foot in Bashforth's experiments being the weight of 1 cubic foot of air at 62° F. and 30 inches barometer), then the resistance R of the air is given, in pounds, by

$$R = \kappa\sigma\tau d^2 p,$$

and τ is called the **coefficient of tenuity.**

The allowance for tenuity becomes very important with high-angle fire at long ranges, when the shot reaches elevated strata of the air where the density may be halved, or $\tau = \frac{1}{2}$.

But in all accurate records of practice it is important that the barometer and thermometer should be read, upon which the value of τ depends, as given in Table XI.

The product $\kappa\sigma\tau$ of the three coefficients κ, σ, τ is replaced by the letter n, and called the **coefficient of reduction,** so that we write

$$R = nd^2 p.$$

The curve connecting p and v, for the standard projectiles experimented with by Mr. Bashforth, is shown by the curve AA of fig. 3; the curve BB is drawn from the results of Krupp's experiments, where a shot with sharper point was employed; while the curve CC is drawn from the experiments with spherical shot. In the curve AA it is noticed that there are two critical points or sudden bends; one is somewhere near 1100 f/s velocity, which is approximately the velocity of sound and the shot travels through undisturbed air when its velocity is above 1100 f/s; the other bend is near the 2400 f/s velocity; this is the cavitation velocity, that is, the velocity with which air rushes into a vacuum such as may be caused at the base of a projectile which is moving at a high velocity.

Fig. 4 is drawn from a photograph of a bullet in flight, taken by Mr. C. V. Boys; the air waves diverging from the head and the base, and the trail of eddies in the wake of the bullet are very clearly shown, and resemble very closely the waves set up on the surface of water by a swift steamer. (*Nature*, March, 1893.)

Digitized by Google

EXPLANATION OF BALLISTIC TABLE III.

Suppose the projectile is flying horizontally, the effect of gravity being left out of account; the motion is retarded continually by the resistance of the air; and if Δv denotes the loss of velocity, in f/s, in a short interval of time of Δt seconds, then the *average* retardation r is given by

$$r = \frac{\Delta v}{\Delta t}.$$

But by Newton's Second Law of Motion, if the shot weighs w lbs. and the resistance of the air is R pounds, then

$$\frac{r}{g} = \frac{\mathrm{R}}{w}, \quad \text{or} \quad \frac{w}{g} = \frac{\mathrm{R}}{r}.$$

Putting—

$$\mathrm{R} = nd^2p,$$

where p refers to the *average* value in the interval of time Δt, then

$$\frac{\Delta v}{\Delta t} = \frac{\mathrm{R}}{w}g = \frac{nd^2pg}{w},$$

or

$$\Delta t = \frac{w}{nd^2}\,\frac{\Delta v}{pg}.$$

The quantity $\frac{w}{nd^2}$ is very important in the theory of gunnery; it is called the *ballistic coefficient* of the projectile, and denoted by the letter C, so that

$$\mathrm{C} = \frac{w}{nd^2},$$

and then

$$\frac{\Delta t}{\mathrm{C}} = \frac{\Delta v}{pg}.$$

Since p is the same for all projectiles, and g is a constant, then, if we take a constant drop in velocity (say, of 10 f/s, or $\Delta v = 10$),

$$\frac{\Delta v}{pg}$$

is a number *which is the same for all projectiles;* it is denoted by $\Delta\mathrm{T}$, and

$$\Delta\mathrm{T} = \frac{\Delta v}{pg},$$

and this is the time in seconds it takes the unit projectile under standard conditions, for which $\mathrm{C} = 1$, to drop from velocity

$$v + \tfrac{1}{2}\Delta v \text{ to } v - \tfrac{1}{2}\Delta v \text{ f/s},$$

if v denotes the mean velocity in the interval.

Digitized by Google

The number ΔT is calculated numerically once for all, and entered in a column; afterwards the sum of the values of ΔT is made, and entered into a column denoted by T_v, as in Table III, so that $T_V - T_v$ is the time taken by the shot, whose ballistic coefficient C is unity, whilst its velocity falls from V to v f/s.

If the value of C be not unity, then since

$$\frac{\Delta t}{C} = \frac{\Delta T}{1} = \frac{\Delta v}{pg},$$

i.e.,

$$\Delta t = C \,.\, \Delta T,$$

$$\therefore\ t = C\,(T_V - T_v). \ldots\ldots\ldots\ldots\ldots\ldots (1)$$

Thus, for example, while the velocity of the shot falls from 1510 to 1500 f/s, the mean velocity in the interval

$$v = 1505;$$

and the corresponding mean value of p from Table II is

$$p = 10{\cdot}3235.$$

Then, with $\Delta v = 10$, $g = 32{\cdot}19$, $\log g = 1{\cdot}5077$, $\log \frac{\Delta v}{g} = \bar{1}{\cdot}4923$.

$\bar{v}$ denotes the mean velocity over an interval.

v.	$\bar{v}$.	p.	$\Delta T = \frac{\Delta v}{pg}$.	T. (In Table III.)
2000	..	..	..	233·4956
	2005	17·2005	0·0181	
2010	..	..	..	233·5137
	2015	17·4100	0·0178	
2020	..	..	..	233·5315
	2025	17·6335	0·0177	
2030	..	..	..	233·5492
	2035	17·8710	0·0174	
2040	..	..	..	233·5666
	2045	18·1095	0·0171	
2050	..	..	..	233·5857

Proportional parts must be employed for unit increments of velocity; and to save this trouble the Table III for T_v has these values interpolated for units in the velocity.

It will be noticed that Table III begins with the tabular number 75·399 against the velocity $v = 100$; this number has no particular signification, but it is made sufficiently large so as not to become negative, supposing the provisional values of the resistance of the air adopted for low velocities should be modified, leaving the numbers for higher velocities unchanged.

Thus it is probable that this number for T against the velocity $v = 100$ was originally put down by Mr. Bashforth as 75, but became modified to 75·399 on a subsequent revision of the table.

Digitized by Google

EXPLANATION OF BALLISTIC TABLE IV.

Next let Δs denote the number of feet described in the interval of time Δt seconds; then

$$\Delta s = v\Delta t,$$

if v denotes the *mean* velocity in the interval; and dividing by C, the ballistic coefficient

$$\frac{\Delta s}{C} = v\frac{\Delta t}{C} = v\Delta T.$$

Denoting this number by ΔS, then

$$\Delta S = v\Delta T,$$

a number which can be tabulated in a Ballistic Table, as it is the same for all projectiles; it is the number of feet which the unit projectile will advance, under standard conditions, while its velocity drops from $v + \frac{1}{2}\Delta v$ to $v - \frac{1}{2}\Delta v$ f/s.

Thus in the interval during which the velocity drops from 1510 to 1500 f/s, we can put

$$v = 1505,$$

and, continuing the numerical calculations,

v.	$\bar{v}$.	$\Delta S = \bar{v}\Delta T$.	S. (In Table IV.)
2000	..	..	45207·1
	2005	36·2	
2010	..	..	45243·3
	2015	35·9	
2020	..	..	45279·2
	2025	35·7	
2030	..	..	45314·9
	2035	35·4	
2040	..	..	45350·3
	2945	35·1	
2050	..	..	45385·4

Any slight discrepancy which may be encountered in the last figure in these calculations may be explained as due to small variations in the density of the air, or to the use of four-figure logarithms; the Slide Rule may be used to perform these calculations with sufficient accuracy.

The calculated values of ΔS are summed, and entered in the first column of Table IV; and the values of S for unit increments of velocity are interpolated afterwards.

Now if a shot goes s feet while the velocity drops V to v f/s,

$$s = C(S_V - S_v). \quad \ldots\ldots\ldots\ldots\ldots\ldots (2)$$

Here again, to avoid negative numbers in case of a revision of Table IV, an arbitrary number S = 1066 is entered against $v = 100$;

Digitized by Google

but as the Table is used for differences $S_V - S_v$, this number does not affect the results; this number 1066 was probably 1000 before a revision of the Table at low velocities.

These two Tables III and IV for T_v and S_v are called Bashforth's Ballistic Tables for Time and Distance (or Space); the numbers T_v and S_v are called the *reduced* time and *reduced* distance; and

$$C\,(T_V - T_v),\quad C\,(S_V - S_v)$$

represent the time taken in seconds and the distance gone in feet, between any initial velocity V and final velocity v, by a shot for which the *ballistic coefficient*

$$C = \frac{w}{nd^2}$$

is unity; for instance a 1-inch 1-pr., or 3-inch 9-pr., of standard shape, under standard conditions, so that $n = 1$.

Digitized by Google

EXPLANATION ON BALLISTIC TABLE V.

A third table, Table V, due to Mr. W. D. Niven, called the *Degree Table*, gives the *deviation* in direction in the vertical plane of a projectile in a flat trajectory, between any initial velocity V and final velocity v f/s.

For if Δi denotes in *radians* (or circular measure) the change of direction, or of slope i, in the trajectory in the time Δt seconds, then resolving normally (as proved in Part II),

$$v \frac{\Delta i}{\Delta t} = g \cos i.$$

When i is small, cos i may be replaced by unity; and

$$\Delta i = \frac{g}{v} \Delta t.$$

But if $\Delta\delta$ denotes the number of degrees in Δi radians,

$$\Delta\delta = \frac{180}{\pi} \Delta i = \frac{180g}{\pi} \frac{\Delta t}{v}.$$

Dividing by the ballistic coefficient C, and denoting $\frac{\Delta\delta}{C}$ by ΔD, then

$$\Delta D = \frac{180g}{\pi} \frac{\Delta T}{v};$$

and ΔD is a number which is the same for all projectiles, being the number of degrees of deviation in direction of motion of the unit projectile, while its velocity drops from $v + \frac{1}{2}\Delta v$ to $v - \frac{1}{2}\Delta v$ f/s, the projectile flying in a nearly horizontal direction.

In continuation of the preceding numerical calculations—

v.	$\bar{v}$.	$\Delta D = \frac{180g}{\pi} \cdot \frac{\Delta T}{v}$.	D. (In Table V.)
2000	..	..	85·2065
	2005	0·0166	
2010	..	..	85·2231
	2015	0·0163	
2020	..	..	85·2394
	2025	0·0162	
2030	..	..	85·2556
	2035	0·0158	
2040	..	..	85·2714
	2045	0·0154	
2050	..	..	85·2868

The summation of the calculated ΔD, and the interpolation of the values of D for unit increments of velocity in Table V, is carried out in the same manner as before in Tables III and IV.

These calculations will serve as a type of those required in a revision of the present Ballistic Tables, consequent on a redetermination by experiment of the value of p with modern projectiles.

Now if the direction of motion changes through δ degrees,

Digitized by Google

while the velocity drops from any initial velocity V to any final velocity v, then

$$\delta = C(D_V - D_v). \quad \ldots\ldots\ldots\ldots\ldots\ldots (3)$$

This Table V is useful in finding angles of departure and descent in direct fire for a given range of X feet.

For if V denotes the initial velocity, and v the final velocity at the end of the range of R yards or X = 3R feet, then

$$\frac{X}{C} = S_V - S_v,$$

or

$$S_v = S_V - \frac{X}{C},$$

whence v is found from Table IV; and then the time of flight T seconds is given by Table III from the formula

$$T = C(T_V - Tv_0).$$

In a flat trajectory the vertical component of the resistance of the air is insensible, so that we may *assume* that the shot takes equal time in going up to the vertex of the trajectory, and in coming down again; in other words the vertex is at the point of *half time*; so that if v_0 denotes the vertex velocity, then

$$\frac{\frac{1}{2}T}{C} = T_V - Tv_0,$$

or

$$T_V - Tv_0 = \tfrac{1}{2}(T_V - T_v)$$

$$Tv_0 = \tfrac{1}{2}(T_V + T_v),$$

whence the corresponding v_0 is found from Table III.

Now if the angles of departure and descent are denoted in degrees by ϕ and β, employing Table V,

$$\phi = C(D_V - Dv_0).$$

$$\beta = C(Dv_0 - D_v).$$

On the *assumption* that the vertical component of the resistance of the air as insensible, suppose the whole time from the gun G to the target at R to be T seconds (see fig. on p. 37), then the time from G to the vertex A is $\frac{T}{2}$ seconds, and at A the shot is travelling in a horizontal direction only, and there is no velocity in a vertical direction, therefore the vertical velocity of the shot at G must have been $\frac{T}{2}g$.

Let P be any point on the trajectory and let t seconds be the time the shot takes to go from G to P, then, if gravity did not act, the shot would, after t seconds from G, have gone a height $\left(\frac{T}{2}g\right)t$ feet above G.

Gravity acting for t seconds will have reduced this height by $\frac{1}{2}gt^2$ feet.

Digitized by Google

Therefore the shot after t seconds from G will have a height

$$\left(\frac{T}{2}gt - \tfrac{1}{2}gt^2\right)$$

feet above G; *i.e.*, height of shot at P will be

$$h \text{ feet} = \frac{T}{2}gt - \tfrac{1}{2}gt^2 = \tfrac{1}{2}gt(T - t) = \tfrac{1}{2}gt\,t',$$

where t' denotes the time down to the ground.

This formula is useful in plotting out the ordinates of a flat trajectory:—

Taking $g = 32$, makes $h = 16t\,t'$;

and at the vertex of the trajectory, where $t = t' = \frac{1}{2}T$,

$$H = \tfrac{1}{8}gT^2 = 4T^2 = (2T)^2;$$

hence the practical rule—the square of double the time of flight in seconds is the height in feet of the vertex of the trajectory.

It will be noticed, however, that the application of Sladen's formula sometimes will give an appearance to the first part of the trajectory of an upward curvature, as is observable with a golf ball.

The approximation is then unsuitable; and the method must be replaced by one in which gravity is first left out of account, and the projectile is supposed to move in the initial direction of projection against the resistance of the air; and afterwards the effect of gravity is supposed to be restored by depressing the projectile a depth $\frac{1}{2}gt^2$ feet, where t denotes the time of flight to any point; this is equivalent to neglecting the vertical component of the resistance compared with its component parallel to the original direction of projection.

To find when Sladen's formula becomes unsuitable we must find when

$$\frac{R}{w} = \cot\phi,$$

or

$$\frac{nd^2p}{w} = \cot\phi,$$

or

$$\tan\phi = \frac{C}{p},$$

the value of p corresponding to the initial velocity V, and ϕ denoting the angle of departure; for greater values of ϕ the method is unsuitable, and the second method must be adopted at the outset.

Explanation of Tables VI and VII.

It is convenient to have a table giving the change in the tangent of the slope of the trajectory, and this is given by the function I_v in Table VI, such that, if the slope changes from ϕ to θ in fig. 6, while the velocity changes from V to v,

$$\tan\phi - \tan\theta = C(I_V - I_v).$$

Digitized by Google

In Direct Fire the angles ϕ and θ are small enough for tan ϕ and tan θ, and the circular measure of ϕ and θ to be practically the same, so that the function I can be derived from D by multiplying by the factor

$$\frac{\pi}{180} = 0{\cdot}01745;$$

or if calculated independently, by omitting the factor $\frac{180}{\pi}$ employed in the computation of ΔD, so that

$$\Delta I = g\frac{\Delta T}{v}.$$

The *altitude function* A, invented by Colonel Siacci, has been tabulated by Mr. A. G. Hadcock in Table VII; the theory of this function will be given in Part II; it is required for determining the height y in feet of the shot at any intermediate range of x feet, in High Angle as well as in Direct Fire.

In Direct Fire, the formula required is

$$\frac{y}{x} = \tan\phi - C\left(I_v - \frac{A_v - A_v}{S_v - S_v}\right),$$

where v is the remaining velocity determined by Table IV, from

$$X = C(S_v - S_v).$$

If v denotes the striking velocity at the end of the range of X feet, where $y = 0$ again,

$$\tan\phi = C\left(I_v - \frac{A_v - A_v}{S_v - S_v}\right),$$

which, when the angle of projection ϕ is small, may be replaced by

$$\sin 2\phi = Ca,$$

where

$$a = 2\left(I_v - \frac{A_v - A_v}{S_v - S_v}\right),$$

thus determining the angle ϕ for a range X, when V and C are given.

So, also, from the formula

$$\tan\phi - \tan\theta = C\,[I_v - I_v],$$

when ϕ and θ are small, we may write

$$\tfrac{1}{2}\sin 2\phi - \tfrac{1}{2}\sin 2\theta = C\,[I_v - I_v]$$

i.e.,

$$\sin 2\theta = \sin 2\phi - 2C\,[I_v - I_v],$$
$$= Ca - 2C\,[I_v - I_v],$$

and when the end of the range is considered, θ becomes the angle of descent β.

Digitized by Google

Therefore

$$\sin 2\beta = Ca - 2C\,[I_V - I_v].$$

To save the labour of calculating v and thence a, in terms of V and v, Mr. Hadcock has prepared Table X, a table of double entry, in which the value of a for any range of R yards can be read off corresponding to any initial velocity V, and reduced range $\frac{R}{C}$ yards.

To use Table X, look out on the line for the given velocity V, and in the column corresponding to $\frac{R}{C}$ yards, the number a; then

$$\sin 2\phi = Ca, \text{ or } \tan \phi = \tfrac{1}{2}Ca,$$

with sufficient accuracy, either of which determines ϕ.

Thus, suppose the gun to be 9·2-inch, Mk. IX, for which

$$d = 9{\cdot}2\,;\ n = 0{\cdot}9\,;\ w = 380\,;\ \text{M.V.} = 2700 \text{ f/s},$$

$$C = \frac{w}{nd^2} = \frac{380}{0{\cdot}9 \times (9{\cdot}2)^2} = 5 \text{ nearly.}$$

Then the value of a for this M.V. and for a range R = 4000 yards, that is, for a "reduced range" of $\frac{R}{C}$ or $\frac{4000}{5} = 800$ yards, will be 0·01352; this number is got from Table X., by looking out against the velocity of 2700 f/s and a distance, in yards, of 800.

Proportional parts must be used when the data V and $\frac{R}{C}$ fall between two lines or columns of Table X.

In preparing in this way the column of elevations in a Range Table, it is convenient to calculate ϕ for given muzzle velocity V for every 100 C yards of range, thus taking multiples of 100 in $\frac{R}{C}$; afterwards to interpolate the values of ϕ for the hundreds of yards of actual range; specimen calculations will be given in the sequel.

SECTION 2.—APPLICATION OF THE BALLISTIC TABLES.

In the application of the preceding Ballistic Tables, the notation employed is:—

w = Weight of projectile, in pounds.

d = Diameter of projectile, in inches.

$n = \kappa\sigma\tau$ = Coefficient of reduction.

κ = Coefficient for shape of projectile.

σ = Coefficient for steadiness of projectile.

τ = Coefficient for tenuity or density of air.

$C = \frac{w}{nd^2}$ = Ballistic coefficient.

V = Initial velocity, in feet per second, f/s.

v = Final velocity, in feet per second, f/s.

t = Time of flight, in seconds.

Digitized by Google

(1.) $$t = C\ (T_r - T_v).$$

s = Distance advanced, in feet.

(2.) $$s = C\ (S_r - S_v).$$

ϕ = Initial direction, in degrees, with horizon.

θ = Final direction.

δ = Deviation in direction = $\phi - \theta$.

β = Angle of descent.

(3.) $$\delta = C\ (D_r - D_v).$$

(4.) $$\tan \phi - \tan \theta = C\ (I_r - I_v).$$

In using Table X, in which the velocity v and the range in yards R are given, and it is required to determine ϕ, the initial direction, look out on the line for the given velocity V, and on the column of range corresponding to $\frac{R}{C}$ yards, the number, and denote it by a: then

(5.) $$\sin 2\phi = Ca,$$

which determines ϕ.

(6.) $$\sin 2\beta = Ca - 2C\ [I_V - I_r].$$

In High-angle Fire, V and v must be replaced in the formulas by U and u, called by Colonel Siacci the *pseudo-velocities*, where

(7.) $$U = V \cos \phi \sec \eta\ ;\ u = v \cos \theta \sec \eta.$$

(8.) η = Mean inclination in the arc ϕ to θ.

$= \frac{1}{2}(\phi + \theta)$, approximately.

(9.) $\sec \eta = \dfrac{i(\phi) - i(\theta)}{\tan \phi - \tan \theta}$, if a closer approximation is desired at high angles of firing; $i(\theta)$ is tabulated in Table VIII.

Now, by the formulas of High-angle Fire

(10.) $$_\phi t_\theta = C\ (T_U - T_u).$$

(11.) $$_\phi x_\theta = C \cos \eta\ (S_U - S_u).$$

(12.) $$\tan \phi - \tan \theta = C \sec \eta\ (I_U - I_u).$$

(13.) $$_\phi\left(\frac{y}{x}\right)_\theta = \tan \phi - C \sec \eta \left(I_U - \frac{A_U - A_u}{S_U - S_u}\right)$$

$$= \tan \phi - C \sec \eta \cdot \frac{a}{2}.$$

In calculating the trajectory over an arc from inclination ϕ to θ, equations (8) and (9) determine η; and V being given, U is found from (7), and then (12) gives I_u and u.

Thence (10), (11), (13), give t, x, and y.

Digitized by Google

Other useful formulas are—

(14.) If T is whole time of flight, and v_0 is vertex velocity .. .. $\left.\begin{array}{l}\\\\\end{array}\right\}$ $\frac{1}{2}T = C(T_V - Tv_0)$ second
or $Tv_0 = \frac{1}{2}(T_V + Tv)$

(15.) The angle of projection $\phi = C(D_V - Dv_0)$.

The angle of descent .. $\beta = C(Dv_0 - Dv)$.

(16.) Height y at any point where T is the whole time .. .. .. $\left.\begin{array}{l}\\\\\end{array}\right\}$ $y = \frac{1}{2}gt\ (T - t)$ feet.

(17.) Maximum height .. $H = 4(T)^2 = (2T)^2$ feet.

(18.) Muzzle energy (M.E.) $= \frac{wV^2}{2g \times 2240}$ ft.-tons.

(19.) Striking energy (S.E.) $= \frac{wv^2}{2g \times 2240}$ ft.-tons.

Penetration of wrought iron plate:

(20.) Captain Orde Browne's rough rule $\left.\begin{array}{l}\\\\\end{array}\right\}$ $p = \frac{vd}{1000}$ inches.

(21.) For moderate striking velocities $\left.\begin{array}{l}\\\\\end{array}\right\}$ $p = 855\frac{d^{\frac{3}{4}}}{wv^{\frac{1}{2}}}p^{97}$.

(22.) For higher velocities. Tresidder's formula $\left.\begin{array}{l}\\\\\end{array}\right\}$ $p^2 = \frac{wv^3}{d} \times \frac{1}{\log^{-1} 8{\cdot}8410}$.

The Slide Rule may replace, with ample accuracy, the four-figure logarithms used in the calculations.

N.B.—With modern projectiles and modern armour (20), (21), (22) are replaced by

$$p = \frac{vd}{2200}.$$

See *Problem* 13, p. 39.

Digitized by Google

Problem 1.—Given C, V, v to find t.

Problems on Direct Fire.

Problem 1.—Find the time it will take for the velocity of the projectiles fired from (*a*) 15-pr. B.L. Mark IV, (*b*) 6-inch B.L. Mark VII ($\frac{1}{2}$ charge), (*c*) 9·2-inch B.L. Mark II ($\frac{3}{4}$ charge) to fall to 1000 f/s, using Table III and

$$t = C\,(T_V - T_v).$$

Data.	*d*.	*w*.	V.	*v*.
(*a*)	3·0	14·0	1581	1000
(*b*)	6·0	100	1570	1000
(*c*)	9·2	380	1531	1000

Note.—Take $n = 0{\cdot}9$ in this and all other examples, if not otherwise stated.

The solution of these problems should be effected by the use of the Slide Rule with sufficient accuracy for practical purposes and in a shorter time than by using logarithms; in any case, even in the simplest problems, the work should be set out in some such form as the following:—

To find t in each case, using logarithms,

$$t = C\,(T_V - T_v).$$

	(*a*.)	(*b*.)	(*c*.)
$\log w$	1·1461	2·0000	2·5798
$\log d^2$	0·9542	1·5563	1·9276
$\log \frac{w}{d^2}$	0·1919	0·4437	0·6522
$\log n$	$\bar{1}$·9542	$\bar{1}$·9542	$\bar{1}$·9542
$\log \frac{w}{nd^2} = \log C$	0·2377	0·4895	0·6980
T_V	232·5472	232·5165	232·4046
$T_v = T_{1000}$	229·5207	229 5207	229·5207
$T_V - T_v$	3·0265	2·9958	2·8839
$\log (T_V - T_v)$	0·4809	0·4766	0·4600
$\log C$	0·2377	0·4895	0·6980
$\log t = \log C\,(T_V - T_v)$	0·7186	0·9661	1·1580
t	5·231	9·249	14·39

Working with a Slide Rule, we have

	(*a*.)	(*b*.)	(*c*.)
$\frac{w}{nd^2} = C$	1·729	3·08	
V	1581	1570	
T_V	232·5472		
$T_v = T_{1000}$	229·5207		
$T_V - T_v$	3·0265		
$t = C\,(T_V - T_v)$	5·23		

Digitized by Google

Problem 2.—Given V, C, *t* to find *v*.

Problem 2.—Given V, C, and *t*, to find *v*, from the formula

$$T_v = T_V - \frac{t}{C}.$$

Find the remaining velocity after 15 seconds of the projectiles in Problem 1.

Here $t = 15$, the other data are as in the preceding problem, working by Slide Rule.

	(*a.*)	(*b.*)	(*c.*)
T_V	232·5472	232·5165	232·4046
$\frac{t}{C} = \frac{15}{C}$	8·67	4·858	3·0070
T_v	223·8772	227·6585	229·3976
v	733	884	991 f/s.

Problem 3.—Given *v*, C, *t* to find V.

Problem 3.—Given *v*, C, and *t*, to find V, from the formula

$$T_V = T_v + \frac{t}{C}.$$

Find the muzzle velocities of the following three guns in order that their remaining velocity after 4·8 seconds may be 970 f/s :—

	d.	*w.*
(*a.*) 6-pr. Hotchkiss Q.F.	2·244	6·0
(*b.*) 12-pr. B.L.	3·0	12·5
(*c.*) 8-inch B.L. Howitzer	8·0	276·5

As usual, n is taken = 0·9, working by Slide Rule.

	(*a.*)	(*b.*)	(*c.*)
$C = \frac{w}{nd^2}$	1·323	1·543	4·790
$\frac{t}{C} = \frac{4·8}{C}$	3·625	3·11	1·00
$T_v = T_{970}$	229·1014	229·1014	229·1014
$T_V = T_v + \frac{}{C}$	232·7264	232·2114	230·1014
V	1648	1467	1048

V, C, and *v*, to find *s*, from Table IV and the

$s = C (S_V - S_v)$.

at which the remaining velocities of the 1200 f/s.

r data are as in Problem 1.

Digitized by Google

Problem 5.—Given V, C, *s* to find *v*.

The results shown here are got by Slide Rule, and can be verified by using logarithms.

	(*a.*)	(*b.*)	(*c.*)
V	1581	1570	1531
S_V	43523·5	43475·1	43301·7
$S_v = S_{1200}$	41591·9	41591·9	41591·9
$S_V - S_v$	1931·6	1883·2	1709·8
C	1·729	3·08	4·98
$S = C(S_V - S_v)$ ft.	3340	5813	8531
Range in yards $= \frac{S}{3}$	1113	1938	2844

Problem 5.—Given V, C, and *s*, to find *v*, from the formula

$$S_v = S_V - \frac{s}{C}.$$

Find the remaining velocity and time of flight for a range of 1,800 yards for the following guns:—

	d.	*w.*	*n.*	V.
(*a.*) Service rifle.....	0·307	215 grains	0·78	2050
(*b.*) 3-pr. Nordenfelt Q.F....	1·85	3·3 lbs.	1·0	1920
(*c.*) 8-inch B.L.	8·0	180 lbs.	0·9	2000

Note.—The calibre of (*a.*) is 0·303, but the depth of each rifling groove is 0·004, or more than 1 per cent. In such a case it is usual to take *d* as the calibre + the depth of *one* groove.

There are 7,000 grains in one pound avoirdupois.

By Slide Rule:—

	(*a.*)	(*b.*)	(*c.*)
$\frac{w}{nd^2} = C$	0·417	0·964	3·13
V	2050	1920	2000
S_v	45385·4	44908·7	45207·1
$\frac{s}{C} = \frac{1800 \times 3}{C}$	12960·0	5610·0	1725·0
S_v	32425·4	39298·7	43482·1
v	627	961	1572 f/s.

Next to find the times of flight

$$t = C(T_V - T_v).$$

	(*a.*)	(*b.*)	(*c.*)
T_V	233·5837	233·3432	233·4956
T_v	219·9914	228·9678	232·5221
$T_V - T_v$	13·5923	4·3754	0·9735
$t = C(T_V - T_v)$	5·66	4·22	3·05 secs.

Digitized by Google

Problem 6.—Given C, V, s to find v, t.

Problem 6.—Given C, V and s to find v and t. Find the remaining velocities and times of flight of the projectiles in Problem 5 for ranges of 1000, 1500 and 2000 yards.

(*a.*)

Range in yards	1000.	1500.	2000.
$S_V = S_{2050}$	45385·4	45385·4	45385·4
$\frac{s}{C} = \frac{3 \times \text{(range in yards)}}{0{\cdot}417}$	7200·0	10800·0	14400·0
$S_v = S_V - \frac{s}{C}$	38185·4	34585·4	30985·4
v	889·4	712·8	574·5
$T_V = T_{2050}$	233·5837	233·5837	233·5837
T_v	227·7568	223·2127	217·5720
$T_V - T_v$	5·8269	10·371	16·0117
$t = C(T_V - T_v)$	2·43	4·32	6·68

(*b.*)

$S_V = S_{1920}$	44908·7	44908·7	44908·7
$\frac{s}{C} = \frac{3 \times \text{(range in yards)}}{0{\cdot}964}$	3110·0	4665·0	6220·0
$S_v = S_V - \frac{s}{C}$	41798·7	40243·7	38688·7
v	1234	1031·0	920 f/s
$T_V = T_{1920}$	233·3432	233·3432	233·3432
T_v	231·3091	229·9144	228·3090
$T_V \quad T_v$	2·0341	3·4288	5·0342
$t = C(T_V - T_v)$	1·96	3·30	4·85

(*c.*)

$S_V = S_{2000}$	45207·1	45207·1	45207·1
$\frac{s}{C} = \frac{3 \times \text{(range in yards)}}{3{\cdot}13}$	959·0	1438·0	1918·0
$S_v = S_V - \frac{s}{C}$	44248·1	43769·1	43289·1
v	1752	1638	1528
$T_V = T_{2000}$	233·4956	233·4956	233·4956
T_v	232·9822	232·7008	232·3958
$T_V - T_v$	0·5134	0·7948	1·0998
$t = C(T_V - T_v)$	1·61	2·49	3·44 secs.

Digitized by Google

Problem 7.—Given V, C and s to find v, and thence to find the striking energy (E) of the shot and the penetration of wrought iron.

Problem 7.—Given V, C, to find v and striking energy.

Find the striking velocity and energy, also the number of inches of wrought-iron armour that can be penetrated at 3,000 yards by—

	w.	n.	V.
(*a.*) 6-inch B.L., Mk. VII	100	0·9	2493
(*b.*) 10-inch R.M.L., Mk. I	410	1·0	1379
(*c.*) 12-inch B.L., Mk. IX	850	0·9	2433

	(*a.*)	(*b.*)	(*c.*)
$C = \frac{w}{nd^2}$	3·09	4·10	6·56
V	2493	1379	2433
S_V	46737·2	42589·3	46560·7
$\frac{s}{C} = \frac{3 \times 3000}{C}$	2912	2198·0	1374·0
$S_v = S_V - \frac{s}{C}$	43825·2	40391·3	45186·7
v	1651	1044	1994 f/s.

The striking energy in foot-tons, $E = \frac{wv^2}{2g \times 2240}$, by logarithms,

	(*a.*)	(*b.*)	(*c.*)
log v^2	6·4356	6·0374	6·5996
log w	2·0000	2·6128	2·9294
log wv^2	8·4356	8·6502	9·5290
log $2g$	1·8088	1·8088	1·8088
log 2240	3·3502	3·3502	3·3502
log $2g \times 2240$	5·1590	5·1590	5·1590
$\log E = \log \frac{wv^2}{2g \times 2240}$	3·2766	3·4912	4·3700
E	1891	3098·0	23440·0 ft. tons.

These results can be quickly verified by using the Slide Rule as an exercise, and check.

The penetration may be obtained by the empirical formula of Gavre, sometimes called Krupp's,

$$v = 855 \frac{d^{\frac{3}{4}}}{w^{\frac{1}{2}}} p^{0·7},$$

Digitized by Google

	(*a.*)	(*b.*)	(*c.*)
$\log w^{\frac{1}{3}}$	1	1·3064	1·4647
$\log v$	3·2178	3·0187	3·2998
$\log v.w^{\frac{1}{3}}$	4·2178	4·3251	4·7645
$\log 855$	2·9320	2·9320	2·9320
$\log d^{\frac{2}{3}}$	0·5837	0·7500	0·8094
$\log 855.d^{\frac{2}{3}}$	3·5157	3·6820	3·7414
$\log p^{0\cdot7}$	0·7021	0·6431	1·0231
$\log p$	1·003	0·9187	1·4616
p	10·07	8·292	28·95 inches.

Using the rough rule of $p = \frac{vd}{1000}$,

p 9·9 10·44 23·9 inches.

Problem 8.—Given C, *v* and *s* to find V from

$$S_V = S_v + \frac{s}{C}.$$

Problem 8.—Given C, *v*, *s* to find V.

Find the muzzle velocity of the 12-pr. B.L. Mk. IV of 6 cwt. when the time taken by the projectile in passing between two screens 180 feet apart (the first being 50 yards from the muzzle) is

(*a.*) 0·1152 second, with the service projectile,
(*b.*) 0·1174 „ „ flat-headed projectile.

In both cases $\sigma = 0{\cdot}9$, in (*a.*) $k = 1{\cdot}0$, and in (*b.*) $k = 1{\cdot}817$. What difference in the result of (*b.*) will be caused by taking $k = 2{\cdot}0$?

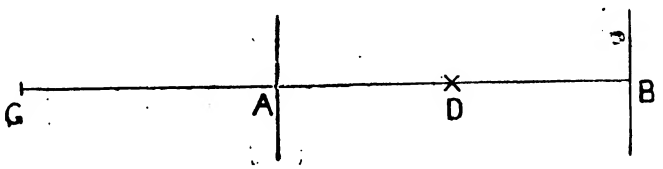

Suppose the muzzle of the gun at G, the 1st screen at A and the 2nd one at B, then

GA = 50 yards = 150 feet,
AB = 180 feet.

The velocity of the shot diminishes continuously, but not at a uniform rate from A to B; for purposes of calculation in such problems as this the mean velocity of the shot between A and B is considered to be at D, the mid-point of AB, so that we find the velocity at D by dividing the distance AB by the time taken in going from A to B.

Digitized by Google

Thus velocity at point D $= v = \frac{AB}{t} = \frac{180}{0{\cdot}1152}$ f/s for (*a.*);

$$v = \frac{180}{0{\cdot}1174} \text{ f/s for } (b.).$$

Now,

$$AD = \frac{180}{2} = 90 \text{ feet},$$

hence

$$\text{distance GD} = (3 \times 50 + 90) \text{ feet} = 240 \text{ feet}.$$

The velocity v at D is known, and

$$GD = s = 240,$$

C is calculated, and the muzzle velocity at G is found from

$$S_V = S_v + \frac{s}{C}.$$

	(*a.*)	(*b.*)	(*b'.*)
	$k = 1{\cdot}0$	$k = 1{\cdot}817$	$k = 2{\cdot}0$
	$\tau = 1$	$\tau = 1$	$\tau = 1$
$v = \frac{180}{t}$	1564	1534	1534
$C = \frac{w}{k\sigma\tau d^2}$	1·545	0·849	0·772
$= \frac{12{\cdot}5}{k \times {\cdot}9 \times 1 \times 3^2}$			
$\frac{s}{C} = \frac{240}{C}$	155·5	282·5	310·5
S_v	43448·6	43315·1	43315·1
$S_V = S_v + \frac{s}{C}$	43604·1	43597·6	43625·6
V	1599 f/s	1599 f/s	1604 f/s

The above is worked out by Slide Rule.

Problem 9.—Find the remaining velocity, time of flight, and height of the trajectory of the service rifle at intervals of 125 yards for a range of 1000 yards, using the formula

Problem 9.—Given V for a magazine rifle to plot the trajectory.

$$h = \tfrac{1}{2}gt\,(T - t)$$

for the height.

From Problem 5 we get the data

$$d = 0{\cdot}307 \text{ inch},$$

$$w = \tfrac{215}{7000} \text{ lb.},$$

$$n = 0{\cdot}78,$$

$$V = 2050.$$

Digitized by Google

Therefore

$$C = \frac{w}{nd^2} = \frac{215}{7000} \cdot \frac{1}{(\cdot 78) \times (\cdot 307)^2} = 0{\cdot}417.$$

To complete the problem, we have to use in succession three formulas

$S = C(S_V - S_v)$ to get remaining velocities,

$t = C(T_V - T_v)$ to get time for various distances,

$h = \frac{1}{2}gt(T - t)$ for the ordinates at various distances.

The annexed scheme of calculation shows a systematic procedure and blank spaces are to be filled in as an exercise.

It will be seen that the greatest height of the trajectory lies between 500 yards and 625 yards, which shows that this highest point is a little beyond the half-way range; also on plotting to scale the curve is much less steep up to the highest point or vertex than from the vertex to the end of the range.

Digitized by Google

Range in yards ..	125	250	375	500	625	750	875	1000	Remarks.
s in feet	375	750	1125	1500	1875	2250	2625	3000	
$\frac{s}{C} = \frac{s}{\cdot 417}$	900	1800	2700	3600	4500	5400	6300	7200	
$S_V = S_{2050}$	45385·4	45385·4						45385·4	
$S_v = S_V - \frac{s}{C}$	44485·4	43585·4						38185·4	
v	1811	1595	1399	1231	1098	1011	946	889·4	
$T_V = T_{2050}$	233·5837	233·5837						238·5837	
T_v	233·1156	232·5858						227·7568	
$T_V - T_v$	0·4681	0·9979						5·8269	
$C(T_V - T_r) = t$	0·1955	0·416	0·665	0·954	1·278	1·631	2·019	2·428	$\therefore T = 2 \cdot 428$
$T = 2 \cdot 428$	2·428	2·428						2·428	
$T - t = 2 \cdot 428 - t$	2·233	2·012						0	
h in feet $= \frac{1}{2}gt(T - t)$	7·0	13·4	18·9	22·7	23·4	20·9	13·4	0	Take $g = 32$

Digitized by Google

Problem 10.—Given V, C, R to find ϕ from formula $\sin 2\phi = Ca$.

Problem 10.—Given V, C and R to find ϕ, the angle of projection, from Table X., and the formula

$$\sin 2\phi = Ca.$$

Also to find β, the angle of descent from Table VI, and the formula

$$\sin 2\beta = 2C(I_V - I_v) - Ca.$$

Find ϕ and β for the service rifle at intervals of 125 yards up to a range of 1000 yards.

Note.—125 yards is selected because it makes the value of $\frac{R}{C}$ always an exact multiple of 100 yards, thereby avoiding the use of proportional parts in Table X.

We have, from Problem 9,

$$V = 2050,$$
$$C = 0{\cdot}417.$$

V, C being known, we calculate ϕ thus:—

V = 2050 f/s.

Range in yards, R.	$\frac{R}{C}$.	a.	$Ca = \sin 2\phi$ (by slide rule).	2ϕ.	ϕ.
				° ′	° ′
125	300	0·00742	0·003093	10·5	5·25
250	600	0·01611	0·00672	23·0	11·5
375	900	0·02686	0·01119	38·5	19·25
500	1200	0·04011	0·01672	57·6	28·8
625	1500	0·05580	0·02329	1 20	40·0
750	1800	0·07404	0·03091	1 46	53·0
875	2100	0·09480	0·03955	2 16	1 8
1000	2400	0·1184	0·0494	2 50	1 25

By a similar scheme we can calculate β, without first knowing ϕ, by Table VI. and

$$\sin 2\beta = 2C(I_V - I_v) - Ca.$$

Digitized by Google

Range in yards (R)	125	250	375	500	625	750	875	1000
$\frac{R}{C}$	300	600	900	1200	1500	1800	2100	2400
$I_V = I_{300}$	0·886276	0·886276	0·886276	0·886276	0·886276	0·886276	0·886276	0·886276
v (from Problem 9)	1811	1595	1399	1231	1098	1011	946	889
I_v	0·878447	0·868400	0·855426	0·838470	0·816940	0·790900	0·760360	0·725720
$I_V - I_v$	0·007829	0·017876	0·030850	0·047806	0·069336	0·095376	0·125916	0·160556
$2C(I_V - I_v)$	0·006530	0·01489	0·02570	0·03987	0·05778	0·07955	0·10500	0·1338
Ca (from above)	0·003093	0·00672	0·01119	0·01671	0·02330	0·03091	0·03955	0·0494
$\sin 2\beta = 2C(I_V - I_v) - Ca$	0·003437	0·00817	0·01451	0·02316	0·03448	0·04870	0·06545	0·0844
2β	12′	28′	50′	1° 20′	1° 58′	2° 48′	3° 45′	4° 51′
β	6′	14′	25′	40′	59′	1° 24′	1° 52′	2° 25

Digitized by Google

It is advisable in all long series of calculations of this description to plot the results on a large sheet of squared paper, as then not only can numerical errors be at once detected by the irregularity of the curve, but any intermediate values can be read off at once and with sufficient accuracy for most practical purposes.

A short and sufficiently accurate method of obtaining β when ϕ is known for all ranges is

$$\beta' = \frac{5R}{\Delta R},$$

where β is in minutes, R the range, and ΔR the extra range obtained by adding 5 minutes to ϕ (the minutes elevation for range R).

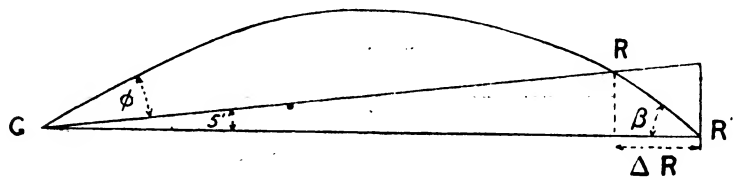

Thus, in triangle GRR′,

$$\frac{R+\Delta R}{R} = \frac{GR'}{GR} = \frac{\sin GRR'}{\sin GR'R} = \frac{\sin(\beta+5)}{\sin\beta} = \frac{\beta+5}{\beta},$$

i.e.,

$$1 + \frac{\Delta R}{R} = 1 + \frac{5}{\beta},$$

or

$$\beta' = \frac{5R}{\Delta R}.$$

Problem 11.—To find loss of range for a reduced muzzle velocity, using formula $\sin 2\phi = Ca$

Problem 11.—The guns in Problem 1 are fired with velocities reduced 50 f/s. Find the errors in range at 1000, 2000 and at 4000 yards caused by using the old tangent scale.

Making use of Table X., ϕ for each range is found thus

$$R_1, \quad \frac{R_1}{C}, \quad a, \quad aC, \quad 2\phi, \quad \phi,$$

looking up a for the original velocity.

Then the new value of R is found by reversing the process, thus

$$\phi, \quad 2\phi, \quad aC, \quad a, \quad \frac{R_2}{C}, \quad R_2$$

looking up a for the reduced velocity.

Then $R_1 - R_2$ is the required result.

This long process is however needless, since the value of a is the same in each case; this is seen at once because

$$a = \frac{\sin 2\phi}{C}.$$

Digitized by Google

$C = \frac{w}{nd^2}$ is the same for the original and for the reduced velocities.

So ϕ is the same, as stated in the question for both velocities.

Therefore a is the same for both velocities. The procedure is now much shortened, it is

$$R, \quad \frac{R_1}{C}, \quad a, \text{ (for original velocity)} \quad \frac{R_2}{C}, \text{ (for reduced velocity)} \quad R_2, \quad R_1 - R_2.$$

The muzzle velocities for the three guns are 1581, 1570, 1531, but are in this problem taken as 1580, 1570, 1530, and the reduced velocities are 1530, 1520, 1480.

(a.) C = 1·729. M.V. = 1580.

R_1 yards.	$\frac{R_1}{C}$.	a (for V = 1580).	$\frac{R_2}{C}$ (for V = 1530).	R_2.	$R_1 - R_2$.
1000	578	0·02672	547·7	947·5	52·5
2000	1156	0·06325	1106·7	1912	88·0
4000	2312	0·1703	2241·7	3880	120·0

(b.) C = 3·09. M.V. = 1570.

			(for V = 1520).		
1000	324	0·01401	306·0	945	55
2000	648	0·03097	615·0	1900	100
4000	1296	0·07458	1242·4	3840	160

(c.) C = 5·0. M.V. = 1530.

			(for V = 1480).		
1000	200	0·00872	188·2	941·0	59
2000	400	0·01862	377·6	1888·0	112
4000	800	0·04198	760·2	3801·0	199

We thus see at a glance the loss of range in yards for all three guns at the different ranges.

The Slide Rule has been used and for gun (a.) the full working showing proportional parts is given.

To find a, from Table X., for $\frac{R_1}{C} = 578$, V = 1580.

Under velocity of 1580 f/s we have

$$a_{600} = \cdot02790$$
$$a_{500} = \cdot02252$$
$$\text{Difference} = \cdot00538.$$

Digitized by Google

Therefore

$$a_{578} = a_{500} + \cdot 00538 \times \tfrac{78}{100} = \cdot 02252 + \cdot 00420,$$
$$= \cdot 02672.$$

Again, given that

$$a = \cdot 02672 \text{ and that } V = 1530, \text{ to find } \frac{R_2}{C}$$

We have under the velocity 1530, Table X.,

$$\begin{aligned} a_{600} &= \cdot 02969 \\ a_{500} &= \cdot 02400 \\ \hline \text{Difference} &= \cdot 00569. \end{aligned}$$

$$\begin{aligned} a_x &= \cdot 02672, \text{ where } x \text{ denotes the unknown } \frac{R_2}{C}. \\ a_{500} &= \cdot 02400 \\ \hline \text{Difference} &= \cdot 00272. \end{aligned}$$

Therefore

$$x \text{ or } \frac{R_2}{C} = 500 + \frac{\cdot 00272}{\cdot 00569} 100.$$
$$= 547 \cdot 7 \text{ (by Slide Rule).}$$

Again, for the 2000-yards range,

$$\begin{aligned} & V = 1580. \\ a_{1200} &= \cdot 06644 \\ a_{1100} &= \cdot 05920 \\ \hline \text{Difference} &= \cdot 00724. \end{aligned}$$

$$\begin{aligned} & V = 1530. \\ a_{1200} &= \cdot 07037 \\ a_{1100} &= \cdot 06274 \\ \hline \text{Difference} &= \cdot 00763. \end{aligned}$$

Therefore

$$\begin{aligned} a_{1156} &= \cdot 05920 + \tfrac{56}{100} \times \cdot 00724 \\ &= \cdot 05920 + \cdot 00405 \\ &= \cdot 06325. \end{aligned}$$

$$\begin{aligned} a_x &= \cdot 06325 \\ a_{1100} &= \cdot 06274 \\ \hline \text{Difference} &= \cdot 00051. \end{aligned}$$

$$x \text{ or } \frac{R_2}{C} = 1100 + 6 \cdot 7 = 1106 \cdot 7.$$

At 4000 yards,

$$\begin{aligned} & V = 1580. \\ a_{2400} &= \cdot 1803 \\ a_{2300} &= \cdot 1689 \\ \hline \text{Difference} &= \cdot 0114. \end{aligned}$$

$$\begin{aligned} a_{2312} &= \cdot 1689 + \tfrac{12}{100} \times \cdot 0114 \\ &= \cdot 1689 + \cdot 00136 \\ &= \cdot\ 70\ \text{[illegible]}. \end{aligned}$$

$$\begin{aligned} & V = 1530. \\ a_{2300} &= \cdot 1770 \\ a_{2200} &= \cdot 1655 \\ \hline \text{Difference} &= \cdot 0115. \end{aligned}$$

$$\begin{aligned} a_x &= \cdot 1703 \\ a_{2200} &= \cdot 1655 \\ \hline \text{Difference} &= \cdot 0048. \end{aligned}$$

$$\begin{aligned} x \text{ or } \frac{R_2}{C} &= 2200 + \tfrac{48}{115} \times 100 \\ &= 2200 + 41 \cdot 7 \\ &= 2241 \cdot 7. \end{aligned}$$

Digitized by Google

Problem 12.—Using the D_V table (Table V), find ϕ and β for ranges of 2000, 3500 and 6000 yards when using a $\frac{3}{4}$ charge for the 9·2-inch B.L., Mark IX. Given M.V. = 2200, $n = 0{\cdot}9$, C = 5·0.

Compare the values of ϕ with those obtained by using Table X and find the maximum height at each range.

In using Table V, the steps are to find the remaining velocity v

Problem 12.—Given V, C, R, to find angles of projection and descent, using formula $\delta = C\ (D_V - D_v)$.

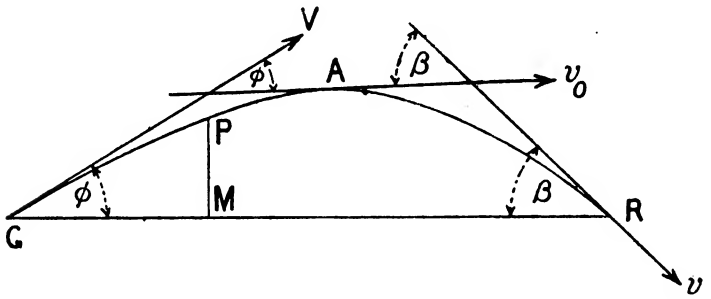

at the end of each range.

Thence to find the whole time of flight T. The time to the highest point being $\frac{T}{2}$, we can find the velocity v_0 at the vertex.

After this we find ϕ and β at once by using the D_V table.

C=5. $\frac{3}{4}$ charge. M.V.=2200 f/s. R=2000, 3500, 6000 yards.

R	2000	3500	6000
$S_V = S_{2200}$	45877·5		
$\frac{s}{C} = \frac{3 \times R}{5}$	1200·0	2100	3600 feet.
S_v	44677·5		
v	1860·0 f/s.	1639·6	1318·32
$T_V = T_{2200}$	233·8158	233·8158	233·8158
T_v	233·2207	232·7050	231·6825
$\frac{t}{C} = T_V - T_v$	0·5951	1·1108	2·1333
t	2·9755		
$\frac{1}{2}\frac{t}{C}$	0·2975		
$T_{v_0} = T_V - \frac{1}{2}\frac{t}{C}$	233·5183		
v_0 (velocity at vertex)	2013	1879	1657

Digitized by Google

$D_V = D_{2200}$	85·4885		
D_{v_0}	85·2280		
$\frac{\phi}{C} = D_V - D_{v_0}$	0·2605		
ϕ	1° ·3025 = 1° 18′	2° ·5305 = 2° 32′	5° ·2015 = 5° 12′
D_{v_0}	85·2280		
D_v	84·9435		
$\frac{\beta}{C} = D_{v_0} - D_v$	0·2845		
β	1° ·42 = 1° 25′	2° ·92 = 2° 55′	6° ·70 = 6° 42′
Maximum height, $H = 4t^2$	35·3 ft.	123·0 ft.	454 ft.

Working by Table X., ϕ is obtained as follows :—

R	2000	3500	6000
$\frac{R}{C}$	400	700	1200
a	0·00870	0·01674	0·03489
$aC = \sin 2\phi$	0·04350	0·08370	0·17445
2ϕ	2° 30′	4° 48′	10° 3′
ϕ	1° 15′	2° 24′	5° 1½′

The disagreement between the results is instructive as showing the limitations of Table V.

Problem 13.—To determine $\frac{w}{d^3}$ for various guns.

Problem 13.—Determine the value of $\frac{w}{d^3}$ for each of the following guns :—

From the results of the values so found, show that Krupp's 1896 formula for the penetration of modern hard-face armour,

$$p^2 = \frac{wv^2}{d} \times \frac{1}{\log^{-1} 6{\cdot}3532},$$

can be put into the simpler form

$$p = \frac{vd}{2200}.$$

Digitized by Google

(*a.*) 6-inch B.L., Mk. VII, $w = 100$, $d = 6$.

(*b.*) 9·2-inch B.L., Mk. X, $w = 380$, $d = 9{\cdot}2$.

(*c.*) 12-inch B.L., VIII, IX, $w = 850$, $d = 12$.

(*d.*) 7·5-inch B.L., $w = 200$, $d = 7{\cdot}5$.

The formula may be written

$$p = \left(\frac{w}{d}\right)^{\frac{1}{2}} \frac{v}{1500},$$

since $\log^{-1} 6{\cdot}3532 = 2250000 = (1500)^2$ nearly, that is

$$p = \frac{vd}{1500} \cdot \left(\frac{w}{d^3}\right)^{\frac{1}{2}}.$$

	(*a.*)	(*b.*)	(*c.*)	(*d.*)
$\frac{w}{d^3}$	0·463	0·488	0·49	0·475

When

$$\frac{w}{d^3} = 0{\cdot}46,$$

$$p = \frac{vd}{1500}\left(\frac{w}{d^3}\right)^{\frac{1}{2}} = \frac{vd}{1500 \times 1{\cdot}47} = \frac{vd}{2200} \text{ nearly.}$$

Problem 14.—The projectiles of the following guns

(*a.*) 15-pr. B.L., Mk. IV, $w = 14$ lbs., $d = 3$, $V = 1580$.

(*b.*) 6-inch B.L., VII (half charge), $w = 100$, $d = 6$, $V = 1570$.

(*c.*) 9·2-inch B.L., IX (full charge), $w = 380$, $d = 9{\cdot}2$, $V = 2642$.

Problem 14.—Effect of change in tenuity factor on range of a gun.

are fired when τ (the tenuity factor) = 1·0 and 0·9.

Find the change in range at every 2,500 yards up to their extreme ranges.

Let the ballistic coefficients when $\tau = 1{\cdot}0$ be C,
and " " " " $\tau = 0{\cdot}9$ " C'.

Then, the same elevation being given at each range,

$$\sin 2\phi = Ca = C'a',$$

$$\therefore \frac{Ca}{C'} = a'.$$

But

$$C = \frac{w}{1 \times d^2}, \quad C' = \frac{w}{{\cdot}9d^2}, \quad \therefore \frac{C}{C'} = 0{\cdot}9.$$

$$\therefore a' = \frac{Ca}{C'} = 0{\cdot}9 \,.\, a.$$

Digitized by Google

The procedure to complete the whole problem is as follows :—

The detail of proportional parts is not shown; it is an excellent practice to verify the work shown either by Slide Rule or by logarithms.

R.	$\frac{R}{C}$.	a.	$a' = \frac{C}{C'} a = 0 \cdot 9a$.	$\frac{R'}{C'}$.	R'.	(R' − R) yards.
V = 1580. 15-pr. B.L. C = 1 ·729. $C' = \frac{C}{0 \cdot 9} = 1 \cdot 92$.						
2500	1440	0 ·08527	0 ·07674	1334	2560	60
5000	2880	0 ·2396	0 ·2156	2693	5170	170
7500	4320	0 ·4704	0 ·4234	4073	7820	320
V = 1570. 6-inch B.L. VII. C = 3 ·09. $C' = \frac{C}{0 \cdot 9} = 3 \cdot 43$.						
2500	810	0 ·04061	0 ·03655	743	2550	50
5000	1620	0 ·10178	0 ·09160	1504	5160	160
7500	2430	0 ·1854	0 ·1669	2268	7790	290
10000	3240	0 ·2905	0 ·2615	3027	10380	380
V = 2640. 9 ·2-inch IX. C = 4 ·92. $C' = \frac{C}{0 \cdot 9} = 5 \cdot 47$.						
2500	510	0 ·00815	0 ·00733	464	2540	40
5000	1020	0 ·01936	0 ·01742	941	5140	140
7500	1530	0 ·03429	0 ·03086	1426	7800	300
10000	2040	0 ·05513	0 ·04962	1921	10500	500
12500	2550	0 ·08340	0 ·07506	2414	13200	700
14000	2860	0 ·1046	0 ·0941	2714	14840	840

Problem 15.—The following is from a paper on "Exterior Ballistics," by Professor G. Forbes, F.R.S. ("Proceedings of the Royal Society," Vol. 74) :—

To make a range table for x per cent. increase of air density diminish each elevation and corresponding range by x per cent. The elevations thus found are correct for the ranges thus found with the new air density. The time of flight is diminished by x per cent. The remaining velocity found in the range table is the same for the new range table at the altered range.

With the usual notation

$$C = \frac{w}{nd^2}$$

v_0 is the velocity at the vertex of the trajectory, v the remaining velocity, X the range in feet.

Suppose the air density increased in the ratio m to 1, let

$$C' = \frac{w}{mnd^2} = \frac{C}{m},$$

and

$$X' = \frac{X}{m},$$

Digitized by Google

so that

$$\frac{X'}{C'} = \frac{X}{C}.$$

Let us now find the elevation for X′ feet.
For a given range X feet

$$S_v = S_V - \frac{X}{C} \quad \ldots\ldots\ldots\ldots\ldots\ldots \quad I,$$

thence

$$t = C\,(T_V - T_v) \ldots\ldots\ldots\ldots\ldots\ldots \quad II.$$

It is assumed that for elevations up to 15° the vertex of trajectory is reached in half the time of flight; hence

$$T_{v_0} = T_V - \frac{\frac{1}{2}t}{C} \quad \ldots\ldots\ldots\ldots\ldots\ldots \quad III,$$

also

$$\phi = C\,(D_V - D_{v_0}) \ldots\ldots\ldots\ldots\ldots\ldots \quad IV,$$

thus for a given range X feet, t, v_0 and ϕ are found.
In I,

$$\frac{X'}{C'} = \frac{X}{C}$$

and V is unchanged. Therefore v remains unchanged, or $v' = v$.
In II,

$$\frac{t'}{t} = \frac{C'}{C} = \frac{1}{m}, \quad \text{or} \quad t' = \frac{t}{m}.$$

Also v'_0 is found from III,

$$T_{v'_0} = T_V - \frac{\frac{1}{2}t'}{C'} = T \quad - \frac{\frac{1}{2}t}{C} = T_{v_0};$$

therefore

$$v'_0 = v_0.$$

Again, from IV,

$$\phi' = C'\,(D_V - D_{v'_0})$$
$$= C'\,(D_V - D_{v_0}) = C' \cdot \frac{\phi}{C} = \frac{\phi}{m}.$$

It appears then that if the air density be increased m °/₀, and the range diminished m °/₀, the elevation and time of flight must be diminished m °/₀, but the remaining velocity is the same.

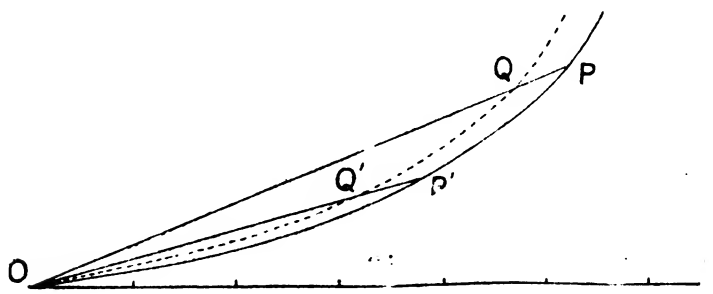

Digitized by Google

Abscissæ represent ranges.
Ordinates represent elevations.
PP′ Range Table elevations at normal air density.
QQ′ " " " with air density increased 10 per cent.
$QP = \frac{1}{11}OP$; $Q'P' = \frac{1}{11}OP'$.

The solution for flat trajectories is extremely neat when stated geometrically.

Draw a curve in which abscissæ are ranges and ordinates are the elevations of the Range Table.

To draw a similar curve for air density increased in the ratio $m : 1$ proceed as follows:—From the origin of co-ordinates O, draw straight lines to points P, P′, &c., on the Range Table curve. In these lines take points Q, Q′, &c., so that

$$\frac{OP}{OQ} = \frac{OP'}{OQ'} = \&c. = m.$$

Then the locus of Q is the new curve.

EXAMPLES.

A.

1. The Range Table for a 6-inch B.L., Mark VII, shows angles of elevation as follows: 3000 yards, 1° 40′; 5000 yards, 3° 33′; 6000 yards, 4° 46′: what will be the Q.E. when the gun is mounted 100 feet above mean sea-level?
2. Certain angles of descent are 1°, 1° 24′, 2° 17′, 4° 24′: find the corresponding slopes of descent.
3. At exactly half tide a gun is known to be 150 feet above the sea-level; the angle of depression to a ship being 50′, find the range.
4. The width of a row of dummies put out is known to be 25 yards, their angular width is observed by the telescopic sight to be 45′: find the range.
5. A 9-feet target is observed from the gun to have an angular height of 5′, another observer makes it 6′: what difference would this make in the calculated range?
6. A ridge of ground, 100 yards distant from a gun, is observed to have an angular height above the horizontal plane of 3° 49′; what is the height of the top of the ridge in feet?

B.

In the following questions the value of n, the coefficient of reduction, is 0·9, unless otherwise stated:—

1. With a 5-inch B.L. Howitzer, find the remaining velocity at 1000 yards range, given M.V. = 782, $w = 50$, $d = 5$ and S is 3000 feet.
2. Find the time of flight of this Howitzer shell over the same range.
3. Find the maximum height of the trajectory.
4. Compare the maximum height with that of the 4·7-inch Q.F., which has a muzzle velocity of 2150 f/s and a time of flight of 1·6 seconds (see Range Table, p. 62) for a 1000 yards range.

Digitized by Google

5. If the first graze of a trial shot from a 4·7-inch Q.F. is observed to occur after 4·3 seconds, the range being 2400 yards, what must be the value of n in this case? (See p. 62.)
6. Calculate the height above the horizontal plane of the 5-inch projectile in Problem (1) at
   (*a.*) The half distance of the range;
   (*b.*) 400 yards from the gun;
   (*c.*) 400 yards short of the target.
7. Plot the 5-inch Howitzer projectile's trajectory for a range of 1000 yards.
8. With the 12-pr. B.L., for which $V = 1710$ f/s, $w = 12{\cdot}5$ lbs., $d = 3$, find
   (*a.*) The remaining velocity at a range of 2000 yards;
   (*b.*) Find the time of flight;
   (*c.*) Find the angle of descent, the angle of elevation being $2° 38'$, and jump $22'$;
   (*d.*) Find the maximum height of the trajectory.
9. A 4·7-inch Q.F. gun is engaging a 12-cm. gun, which is 500 feet higher (as at Ladysmith); the range is 4500 yards. The data for the 4·7-inch Q.F. are to be got from Range Table (p. 62), and the 12-cm. gun is considered as equivalent to the 4·7-in. Q.F., and the same data hold good.
   On a diagram mark for each gun the angles of tangent and quadrant elevation, and of descent and arrival, with their values.
10. Determine the coefficient of reduction n employed in the 4·7-inch Q.F. Range Table (p. 62) at the ranges of 2400 yards and 4500 yards respectively.
11. A 4·7-inch Q.F. gun is 100 feet above sea-level. Determine the height above muzzle-level of an eminence or bluff, 500 yards to the front, which will mask the fire out to sea at ranges of 2000 and 4000 yards.
12. Prove that in firing seawards, at a range of 2000 yards with a muzzle velocity reduced to 1690 f/s, the 4·7-inch Q.F. shot will clear an obstacle 27 feet above the level of the gun and 500 yards from it; gun is 100 feet above sea-level.
13. From the Range Table of a 6-inch B.L., III, we have
    $V = 1327$ f/s; remaining velocity after 2000 yards is 1025 f/s; jump is nil; tangent elevation for 4000 yards is $8° 58'$.
    Time of flight for 4000 yards is 11·59 seconds, and for 2000 yards 5·22 seconds, take $n = 1$.
    Calculate by the D table (Table V), the angle at which the shot is moving when it has advanced 2000 yards in a range of 4000 yards. Prove that the shot is then about 530 feet high in the air.
14. With the Lee-Metford rifle, find the striking velocity for every 200 yards up to 1000 yards. Data are
    $V = 2050$ f/s, $w = 215$ grains, $d = 0{\cdot}307$ inch, $n = 0{\cdot}78$.
    7000 grains = 1 lb. avoirdupois.
15. With the same rifle as in Example (14) find the time of flight over each range.
16. Find the elevation necessary for a 12-inch B.L. projectile to attain a range of 5900 yards. Given $V = 2400$ f/s, $w = 850$ lbs., $n = 0{\cdot}97$, jump $= -8'$, and employing Table X.

Digitized by Google

17. Taking the 6-inch B.L., VII, Range Table (p. 65) and values for $\frac{R}{C} = 500, 1000, 2000, 3000$, show by means of Table X., and sin $2\phi = C.a$, that the ballistic coefficient increases as the elevation increases.

18. Draw on squared paper, to suitable scales, the curves showing

(*a.*) Elevation and range;
(*b.*) Remaining velocity and range;
(*c.*) Angle of descent and range;
(*d.*) Time of flight and range;

for 6-inch B.L., VII (see Range Table, p. 65). Suitable ranges would be 500, 750, 1000, 2000, 3000, &c., yards.

19. A 4·7-inch Q.F. is on the reverse slope of a hill and firing at a target (on same level as the gun), 4000 yards distant; the distance from gun to top of slope is 500 yards and the slope of the hill is 3°; will the shot clear the ridge? (See Range Table, p. 62.)

20. Using Orde Browne's rule, what will be the penetration into wrought-iron plate of

(*a.*) 12-inch B.L., IX, M.V. = 2616, w = 850 lbs.;
(*b.*) 9·2-inch B.L., IX., M.V. = 2740, w = 380 lbs.;
(*c.*) 6-inch B.L., VII, M.V. = 2493, w = 100;

at a range of 4000 yards.

21. Assume Ingall's empirical formula for variation in the weight of the projectile,

$$\frac{\Delta V}{V} = \pm \tfrac{7}{16} \frac{\Delta W}{W},$$

where

ΔW is the change in weight of projectile,
ΔV is the change in muzzle velocity.

What M.V. may be expected for the star shell (w = 31 lbs.) of the 5-inch Howitzer (charge is core and one ring), given that the same charge with a 50-lb. projectile produces a M.V. = 556 f/s, the driving bands of both shells being the same?

[Range Table gives M.V. = 650 f/s for the star shell.]

22. Assuming Ingall's empirical formula

$$\frac{\Delta V}{V} = \pm \tfrac{5}{8} \frac{\Delta w}{w},$$

where

Δw is the change in weight of charge,
ΔV is the change in muzzle velocity.

What M.V. may be expected when the charge is $6\frac{5}{16}$ ozs., given that a charge of $11\frac{7}{16}$ ozs. gives a M.V. of 782 f/s in a 5-inch Howitzer? The 50-lb. shot is used in both cases.

[The Range Table gives the M.V. as 556 f/s.]

23. From Example 15, page 40; show, by using the formula sin $2\phi = Ca$ that

$$\frac{\phi'}{\phi} = \frac{1}{m}$$

for flat trajectories.

Digitized by Google

ANSWERS TO BALLISTIC PROBLEMS.

A.

1. 1° 2′; 3° 10′; 4° 27′.
2. 1 in 57, 41, 25 and 13.
3. 3438 yards.
4. 1910 „
5. 344 „ $\begin{cases} 2063 \\ 1719. \\ \hline 344 \end{cases}$
6. 20 feet.

B.

1. 721 f/s.
2. 4 secs. (about).
3. 64·8 feet [$g = 32$].
4. $\frac{64 \cdot 8}{10 \cdot 24} = 6 \cdot 3$.
5. 0·88 (nearly).
6. (*a.*) 65 ft.; (*b.*) 61·77; (*c.*) 62·81.
8. (*a.*) 1026 f/s; (*b.*) 4·67 secs.; (*c.*) 3° 51′; (*d.*) 87·3 ft.
10. 0·90; 0·89.
11. 6·5 ft. and 73·5 ft. (nearly).
13. 34′ to the horizontal.
15. 0·3282; 0·723; 1·196; 1·754; 2·375 secs.
16. 3° 58′.
19. Yes.
20. (*a.*) 24·2 inches; 17·9; 8·6.
21. 649 f/s.
22. 562 f/s.

Digitized by Google

SECTION 3.—COMPILATION OF RANGE TABLES.

The Range Table of a gun can only be taken as a guide; the data on which a Range Table is compiled are obtained from the results of firing at Shoeburyness on as calm a day as possible, with a comparatively new gun and with carefully prepared ammunition.

There are many causes which lead to difference between the shooting of a gun when fired, say, at annual practice and the shooting of a gun of the same nature in the practice on which the Range Table has been based.

The amount of wear in the bore of the gun, the lot of cordite used, and the temperature of the cordite charge itself may affect the muzzle velocity considerably.

The flight of the projectile itself is affected by the density and humidity of the air, by wind, and by the jump, which can only be ascertained at low angles of elevation.

The official compilation of Range Tables is carried out under the direction of the Ordnance Committee, Woolwich, special tables by Captain Ingalls are used, when convenient.

The tables employed here are those at the end of the book; these are founded on Professor Bashforth's experiments. In the present chapter direct fire only will be dealt with; Part II. of this book deals with high-angle fire.

To obtain the necessary data on which to base the compilation of a Range Table, two series of firing are required.

In the first series five or more rounds are fired at a wooden target, 9 feet square, at 500 yards, for guns of small calibre or low velocity, or at 1000 yards for larger natures. These rounds are fired through two sets of electrical screens, each set connected with Boulangé chronographs; one set is near the gun and the other is placed so that the middle point between its two screens is 500 yards, or 1000 yards from the muzzle of the gun.

By the first series of firing we get the muzzle velocity of the gun, the jump, ballistic coefficient, and coefficient of reduction for one range.

The gun is laid on the bull's-eye of the target by means of cross wires at the breech and muzzle ends of the bore, the angle of depression is recorded by means of a clinometer; sufficient elevation is then given to ensure the target being struck as near the bull's-eye as possible. The rounds are fired and the velocities of the shots at the mid point between two screens of each set of screens are recorded by chronograph; such velocities are called "observed velocities."

EXAMPLE.

Series I (a).

Gun	15-pr. Q.F.	
Projectile ...	Shrapnel shell, weight 14 lb. 6 oz.	
Velocity screens...	1st pair ...	1st screen, 70 feet from muzzle.
		180 feet between screens.
	2nd pair ...	1st screen, 470 yards from muzzle.
		180 feet between screens.
Barometer ...	30·50 inches.	
Thermometer ...	34 degrees.	

Digitized by Google

The quadrant angle of depression of the gun when laid on the target by cross wires in the bore was 24 minutes, and the gun was then elevated through an angle of 22 minutes, this being considered, from experience and an estimate of the muzzle velocity, sufficient T.E. to hit a target 500 yards off. The results of firing (omitting Round 1) were :—

No. of Round.	Observed velocity at 160 ft. from muzzle.	Observed velocity at 500 yds. from muzzle.	Shot struck with regard to centre of target.
	f.s.	f.s.	inches.
2	1585	1415	2·5 up
3	1590	1415	3·5 „
4	1570	1398	5·0 down
5	1598	1424	Centre
6	1594	1422	7·2 down
	Mean point of impact		1·24 down

As the mean point of impact is only 1·4 inches below the centre of the target, the *tangent elevation* for 500 yards may be taken as 22′ (mean).

We now take each round separately, and determine in the following order C, the M.V. and the jump. For round 2 we have :—

Fig. 1.

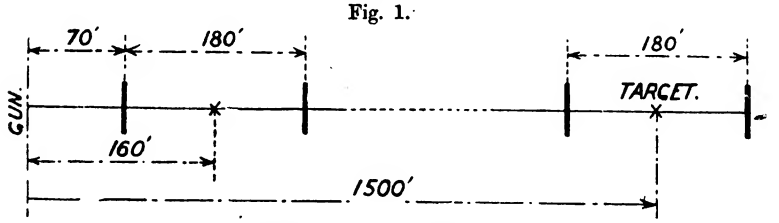

$$C = \frac{1500 - 160}{S_{1585} - S_{1415}} = \frac{1340}{775{\cdot}8} = 1{\cdot}728.$$

We get the muzzle velocity, V, from

$$S_V = S_{1585} + \frac{160}{1{\cdot}728},$$

$$= 43541{\cdot}1 + 92{\cdot}6,$$

$$= 43633{\cdot}7,$$

$$\therefore V = 1606 \text{ f/s.}$$

To find the Jump.—In fig. 2 we see the direction of the axis of the piece when ready to be fired; on firing the gun and before the shot has left the bore, this direction is changed by an angle, J, called the angle of jump, and at present unknown.

Suppose the direction of the shot on leaving the muzzle to be the line of departure, as shown, then we know that T.E. = 22′ in this case, and if ϕ, the angle of projection, be found, we see that

$$\text{angle } \phi - \text{angle of T.E.} = \text{angle J} = \text{jump.}$$

By this method the jump is found.

Digitized by Google

ϕ is got from the formula

$$\sin 2\phi = Ca$$

and Table X.

Fig. 2.

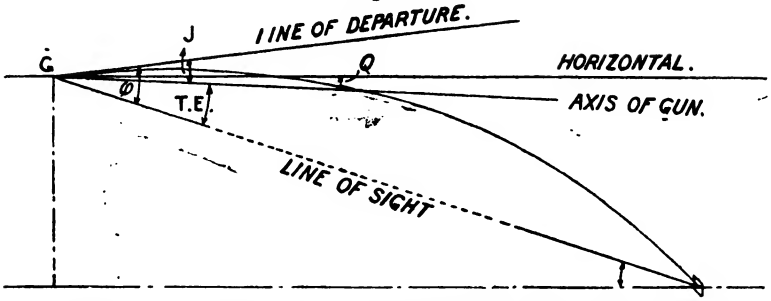

The M.V. is 1606 f/s, but, to simplify the work and with inappreciable error, we will take V = 1610 f/s.

With V = 1610 and $\frac{R}{C} = \frac{500}{1{\cdot}728} = 289{\cdot}4$, from Table X,

$$a_{300} = 0{\cdot}01220$$
$$a_{200} = 0{\cdot}00785$$
$$\text{Diff.} = 0{\cdot}00435.$$
$$\therefore a_{289{\cdot}4} = 0{\cdot}00785 + \frac{89{\cdot}4}{100} \times 0{\cdot}00435$$
$$= 0{\cdot}00785 + 0{\cdot}00388$$
$$= 0{\cdot}01173.$$
$$\therefore \sin 2\phi = C.a$$
$$= 1{\cdot}728 \times 0{\cdot}01173$$
$$= 0{\cdot}0203,$$
$$2\phi = 1^\circ\ 10'$$
$$\phi = 35',$$
$$\text{Jump} = \phi - T = 35' - 22' = 13'.$$

Repeating the above method in each of the other rounds, we get

No. of round.	C.	Muzzle velocity.	Jump.
2	1·728	1606	+ 13 minutes.
3	1·680	1612	+ 13 „
4	1·691	1591	+ 13·75 „
5	1·697	1620	+ 12·50 „
6	1·714	1616	+ 12·50 „
Means . . .	1·702	1609	+ 12·95 minutes.

In finding the jump for each round, the nearest velocity divisible by ten was taken, thus for 1612 f/s, 1610 was chosen; for 1616, 1620 was chosen.

The jump may be taken as 13′ (positive).

Digitized by Google

To find the coefficient of reduction, n; then to find $\kappa\sigma$

$$C = \frac{w}{nd^2} = \frac{w}{\kappa\sigma \cdot \tau \cdot d^2} = 1{\cdot}7,$$

and τ from Table XI $= 1{\cdot}072$,

$$w = 14{\cdot}375,$$
$$d = 3,$$
$$\text{and } \kappa\sigma = \frac{14{\cdot}375}{1{\cdot}072 \times 9 \times 1{\cdot}7} = \frac{w}{\tau \times d^2 \times C}.$$

$$\log C = 0{\cdot}2304$$
$$\log \tau = 0{\cdot}0302$$
$$\log d^2 = 0{\cdot}9542$$
$$\log C\tau d^2 = \overline{1{\cdot}2148}$$
$$\log w = 1{\cdot}1577$$
$$\therefore \log \kappa\sigma = \overline{1{\cdot}9429}$$
$$\kappa\sigma = 0{\cdot}8768$$

From Series I (a) we have therefore

$$V = 1609,$$
$$C = 1{\cdot}7,$$
$$\text{Jump} = 13 \text{ minutes (positive)},$$
$$\kappa\sigma = 0{\cdot}8768,$$
$$\tau = 1{\cdot}072.$$

For the next series we have :—

RESULTS OF PRACTICE IN SERIES I (b).

Barometer—30·50 inches.
Thermometer—dry bulb, 34 degrees; wet bulb, 29 degrees.

Abstract.

Rounds.	Elevation (quadrant).	Means.					Height of axis of gun above sands.	Wind.	
		Time of flight.	Range.	Error in range.	Lateral deviation.	Error in direction.		Velocity (70 feet above ground).	Force and direction.
	° ′	secs.	yards.	yards.	yards. R.	yards.	feet.	f/s.	
5	2 0	4·00	1661	13·2	4·1	1·36	15·3	16	
6	5 0	7·98	2955	13·5	14·8	1·7	16·9	17	
6	8 0	11·77	4040	21·8	28·0	2·06	18·3	14	2 to 4
6	12 0	16·45	5194	10·2	56·2	5·37	19·5	13	
6	16 15	5 rnds. 21·13	6210	16·8	103·0	5·3	21·13	16	

Digitized by Google

First of all the tangent elevations will be found.

In the 2° series, we see that the gun is 15·3 feet above the target, which is 1661 yards off, hence the angle of sight (S minutes) due to this must be added to the quadrant elevation of 2′ to get the tangent elevation.

$$S = \tan^{-1} \frac{15{\cdot}3}{1661 \times 3} = \tan^{-1} 0{\cdot}00307 = 10\tfrac{1}{2} \text{ minutes},$$

or thus

$$S' = 1146 \frac{15{\cdot}3}{1661} \text{ (see p. 5)}$$

$$= 10\tfrac{1}{2}, \text{ by slide rule.}$$

Proceeding in a similar manner for each elevation, we get

	° ′	° ′	° ′	° ′	° ′
Quadrant elevations ..	2 0	5 0	8 0	12 0	16 15
Angle of sight	0 10½	0 6½	0 5	0 4	0 4
	° ′	° ′	° ′	° ′	° ′
Tangent elevations ..	2 10½	5 6½	8 5	12 4	16 19
Jump (+)..	0 13	0 13	0 13	0 13	0 13
	° ′	° ′	° ′	° ′	° ′
Angles of projection, ϕ ..	2 23	5 19	8 18	12 17	16 32

Next to determine the correct coefficient of reduction at each elevation.

In the 2° series, the correction for height of trajectory may be neglected; the atmospheric conditions in Series I (a) and I (b) being the same, we may take C as found before,

$$C = 1{\cdot}7,$$

$$\tau = 1{\cdot}072,$$

$$\kappa\sigma = 0{\cdot}8768.$$

To test how far this is correct, we employ the direct fire formula

$$\sin 2\phi = Ca$$

$$\log \sin 2\phi = \log \sin 4° 46′ = \bar{2}{\cdot}9196$$

$$\log C = 0{\cdot}2304$$

$$\log a = \bar{2}{\cdot}6892$$

$$a = 0{\cdot}04889.$$

Looking out in Table X against this value of a for V = 1610 f/s (instead of 1609), we see that

$$a_{1000} = 0{\cdot}05050$$

$$a_{900} = 0{\cdot}04417$$

$$\text{Difference} = 0{\cdot}00633.$$

Digitized by Google

Let $x\left(=\frac{R}{C}\right)$ be the required "reduced range," then

$$a_x = 0{\cdot}04889$$
$$a_{900} = 0{\cdot}04417$$
$$\text{Difference} = 0{\cdot}00472$$
$$\therefore x = 900 + \frac{0{\cdot}00472}{0{\cdot}00633}\,100 = 900 + 74{\cdot}56,$$

so that

$$\frac{R}{C} = 974{\cdot}56,$$
$$R = 974{\cdot}56 \times 1{\cdot}7 = 1657 \text{ yards.}$$

This is only 4 yards less than that found in practice, therefore we may take at a range of 1660 yards

$$C = 1{\cdot}7,$$
$$\kappa\sigma = 0{\cdot}8768.$$

Next take the series where

$$\phi = 5^\circ\ 19';$$

the mean height of the trajectory must be found; the maximum height is

$$4T^2 = 4 \times (7{\cdot}98)^2 = (15{\cdot}96)^2 = 255 \text{ feet.}$$

The average or mean height of the shot for the tenuity correction is $\frac{2}{3}$ of the maximum.

$$\tfrac{2}{3} \text{ of } 255 = 170 \text{ feet.}$$

This is very small and may be neglected, so that for the 5° series we take

$$C,\ \tau,\ \kappa\sigma \text{ as for the } 2^\circ \text{ series.}$$

This value of C can be tested by the same process as was shown for the 2° series.

For the 8° series,

$$\text{Mean height of trajectory} = \tfrac{2}{3} \cdot 4\,(11{\cdot}77)^2 = 368 \text{ feet.}$$

At the normal barometric height of 30 inches, the rate of fall is 1 inch per 1000 feet, or a reduction of 3·3 % in the density of the air at 1000 feet height.

For 368 feet the reduction will be $\frac{3{\cdot}3}{3}$ or 1 % (nearly), so that we take the correction for the tenuity factor to be

$$0{\cdot}99.$$
$$\therefore C = \frac{1{\cdot}7}{0{\cdot}99} = 1{\cdot}72 \text{ about.}$$

Working with this, we find from $\phi = 8^\circ\ 18'$, V = 1610 and the formula $\sin 2\phi = Ca$, that the range is too small.

Trying C = 1·75, we find

$$\sin 16^\circ\ 36' = 1{\cdot}75 \times a,$$
$$a = 0{\cdot}1632,$$

with a M.V. = 1610, this gives us $\frac{R}{C} = 2291$,

$$\text{or Range (R)} = 4010 \text{ yards.}$$

Digitized by Google

This is sufficiently close to 4040 yards, the actual range as measured.

So that at 4000 yards we may take C = 1·75.

For the 12° series, we find by trial that C = 1·78 is about right; C = 1·77 gives a calculated range of 5111 yards, whereas the measured range is 5194.

The 16° series will be considered later.

It will be found very useful to tabulate the *tangent* elevations for every 100 yards at this stage, as it enables us to determine the approximate angle of descent in the following calculations, and thereby save labour. Taking the ranges as abscissæ and the tangent elevations on page 50 as ordinates, we plot a curve, bearing in mind that the origin will not be at zero, but a point corresponding to 13 minutes *below* the zero point, on account of the jump being positive (had the jump been negative, the origin would be at 13 minutes *above* the zero point); it is also to be remembered that we have a very important point on the curve at the 500 yards range, where the ordinate is 22 minutes, as found in the calculations on Series I (*a*).

We have thus seven points on the curve, including the origin (which is given us by the jump), and if the practice has been good and the data is reliable no point should be off the curve when a flexible ruler is applied to them, in fact, in a good example like the present one, the prolongation of the curve below the 500 yards point may almost be relied upon to find the jump without any calculation; in this case it confirms the calculations.

It will generally be found desirable, especially with high-velocity guns, and in cases where the interval between the target and the next range is great, to calculate an intermediate point on the curve, for any slight sagging of the flexible ruler at this point when striking the curve may easily make a couple of minutes error in the elevation, which here means an appreciable error in the range.

Thus to interpolate some tangent elevations for ranges between 300 and 1700 yards.

Our muzzle velocity is 1609; this we may take as 1610 f/s.

Then with V = 1610, C = 1·7 :—

$\frac{R}{C}$	200	295	400	600	1000
R	340	500	680	1020	1700
a	0·00785	0·01198	0·01682	0·02692	0·05050
$\sin 2\phi = a.C$	0·01326	0·02036	0·02859	0·04576	0·08584
2ϕ	46′	1° 10′	1° 38′	2° 37′	4° 55′
ϕ	23′	35′	49′	1° 18′	2° 27′
Jump	13′	13′	13′	13′	13′
T.E. $= \phi - J$	10′	22′	36′	1° 5′	2° 14′

Digitized by Google

(*a.*) *Tangent Elevation.*

The curve giving the tangent elevation for any range being thus plotted, the Range Table column giving the T.E. for every 100 yards or 50 yards, can be filled in from the curve.

In this case and in all the following it will generally be found, on comparing the "differences" for each elevation, that there are little irregularities due to the impossibility of reading to very small increments on the squared paper. It is necessary, therefore, to "smooth" the curve; that is, to jot down in pencil, between each two elevations, the difference between them, and then correct these differences so as to make them all increase regularly. Care must be taken, of course, that if any "difference" is increased there must be an equal decrease made in a neighbouring one, so as not to alter the mean run of the curve.

(*b.*) *Remaining Velocity.*

These are the actual, that is, the striking velocities, which are calculated below (see page 55), and which are given in a table. Here we take the *calculated* range as the abscissa, and the corresponding remaining velocity as the ordinate; the latter for range *nil* will, of course, be the muzzle velocity. The calculations will never give such exact results that all the points will come absolutely on a curve, and it will be necessary to alter points here and there until they do. In the case under consideration all seven points come on a curve if 900 be altered to 906, or it may be preferred to make a smaller alteration at this point and increase each of the three subsequent velocities by 2, 3, and 5 f/s respectively; the former alternative is preferred, however.

Having determined the curve, take off the velocity for every 100 yards, and insert in the Range Table.

(*c.*) *Alteration in Range due to* 5′ *alteration in Elevation.*

The method of preparing this column is obvious; the alteration in range is calculated for various points—say, every 500 yards—and the intermediate ones interpolated by means of a curve.

(*d.*) 5′ *in Elevation or Deflection alters the Point of Impact vertically or laterally.*

The correction, in either case, is

$$R \times \tan 5'.$$

Calculate this for every 500 yards or so (a slide rule is very useful for the purpose), plot the results on a curve for each of the ranges dealt with, and read off the results for all intermediate points.

The correction R tan 5′ for height may be seen at once from fig. 4; it is there seen that 5′ extra elevation makes a vertical difference at the target of TM, and from the triangle TMF,

$$TM = TF' \tan 5' = R \tan 5'.$$

The correction R tan 5′ for deflection may be shown thus:—

Let B be the backsight, F the foresight of a gun, T the target,

Digitized by Google

then if a deflection BB′ be given such that BFB′ is an angle of 5′, we see that the alteration of the point of impact is TT′ and

$$TT' = TF \tan 5' = R \tan 5' \text{ (see fig. 3).}$$

Fig. 3.

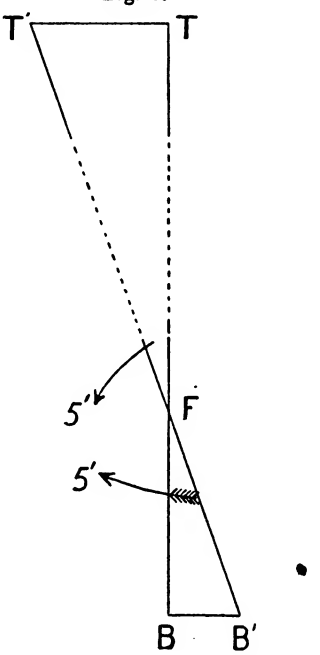

(e.) Angle of Descent (β).

In fig. 4 we see that if 5 minutes extra elevation is given, we get a range increased by MT′.

Taking TT′ as a straight line, we have

$$\begin{aligned} \Delta R = MT' &= TM \cot \beta, \\ &= TF \tan 5' \cot \beta, \\ &= R \tan 5' \cot \beta. \end{aligned}$$

The 5′ extra elevation column (already obtained) gives us the actual value of MT′ at any range, hence since ΔR, R, tan 5′ are known, we get cot β and thence β.

Fig. 4.

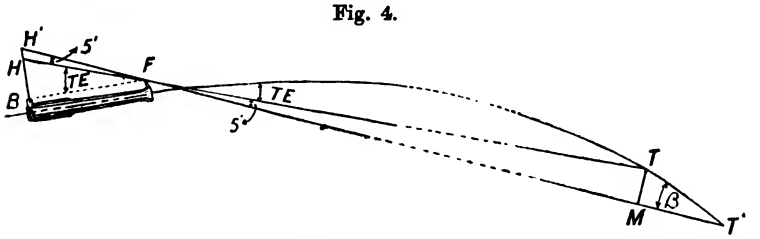

This method gives a very approximate and ready means of finding the angle of descent, and it is a useful check in the work of calculating the angles of descent.

Subjoined is a table showing the calculation of remaining velocities,

Digitized by Google

M.V. = 1609 f/s; C = 1·7; v_0 is the velocity at the vertex.

Range in yards.	$\frac{s}{C}$.	$S_V - \frac{s}{C} = S_v$.	v.	T_v.	$T_V - T_v = \frac{t}{C}$.	t.	$\frac{1}{2}\frac{t}{C}$.	$_{\Delta V} - \frac{1}{2}\frac{t}{C} = T_v$.	v_0.	D_{v_0}	D_v.	$D_{v_0} - D_v = \frac{\beta}{C}$.	β.
0	0	43645·7	1609	232·6238	0	0	0	0	0	0	0	0	0°
500	882·0	42763·7	1415	232·0399		0·9924			1506				37′·5
1000	1764		1248	231·3761	1·2477	2·120			1403				1° 29′
2000	3528		1021			4·814	1·4158	231·2080	1214				4° 2′
3000	5292		900			7·936			1068	80·9175	76·5005	4·4170	7° 30′

Digitized by Google

times of flight, and angles of descent. Beyond 3000 yards a new value of C must be taken according to what has already been found. In each case a curve is drawn by plotting, as described for tangent elevations, the ordinates representing times of flight, remaining velocities, angles of descent, as the case may be, the abscissæ representing range in yards. If any point is much off the curve, the calculation for that range must be scrutinised, and an error may be detected up to 2000 yards, C = 1·7.

(*f.*) *To Strike an Object* 10 *feet high, the Range must be known within* $\frac{5}{3}$ cot β *yards.*

The figures in this column are merely the values $(\frac{1}{2} \cdot \frac{10}{3})$ cot β or $\frac{5}{3}$ cot β yards, where β is the angle of descent at each range.

(*g.*) *Fuze Scale.*

This is obtained from the results of firing: as an example:—

Setting of Fuzes.	Mean Time of Burning.	
	As observed. (Barometer 30·50 inches.)	Corrected for Barometer. 30·00 inches.
	seconds	seconds
5	4·37	4·42
9	8·35	8·45
14	14·66	18·84
18	19·57	19·81

The rule for obtaining the corrected time of burning is that 1 inch of diminution in height of barometer increases the time of burning by 0·03 of the total time for any particular setting, and *vice versâ* for an increase in height of barometer.

Column (3) above is therefore obtained from column (2) by multiplying the figures in the latter by 1·015 to obtain the correction for $\frac{1}{2}$ inch.

The procedure is now as follows:—

Plot a curve of settings and times from the data in columns (1) and (3) in the above table; consult the time and range curve [already plotted from the actual practice], and note the times for every 100 yards from this curve; then, from the time and settings curve, the setting for every 100 yards in range can be read off (in units, halves, and quarters).

(*h.*) *Probability Columns* (*see Chapter III, Section* 2).

Taking the length column first, multiply the mean error in range in each series by 1·69, and the result is the length of the probable rectangle for that series; these are all plotted as ordinates, with the range corresponding as the abscissa. The starting-point of the curve will not be at zero, but at the 500 yards target; in this we have only the mean vertical error, which is 3·9 inches, and as the angle of descent at 500 yards was found by calculation to be 37 minutes, the mean error in range is—

$$\frac{3{\cdot}9 \times \cot 37'}{36} = 10 \text{ yards.}$$

This, multiplied by 1·69, gives the first point for the curve.

Digitized by Google

The mean error at the next point, was [see Series I (*b*)] 13·2 yards at 1,661 yards range, and so on at other ranges; a curve is plotted out for the 50% length zones and a similar procedure is followed for the breadth and height zones.

An example in high-angle fire is here worked out, but the explanation belongs to Part II.

In Series I (*b*)

$$\phi = 16° 32',$$

and it is required to find the range.

Approximately the maximum height of the trajectory is

$$4\,(T^2) = 4\,(21{\cdot}13)^2 = 1786 \text{ feet.}$$

Two-thirds of this is 1190 or roughly 1200 feet.

At this height the density of the air is less than at the surface of the earth.

We know that there is a fall of 1 inch for 1000 feet, so that for 1200 feet there is a fall of 1·2 inches; the normal barometric height being 30 inches, this implies a reduction of 3·3 % in the density of the air for a rise of 1000 feet and for 1200 feet rise, a reduction of $3{\cdot}3 \times 1{\cdot}2 = 4\ \%$, so that, if the value of C was 1·7 at the 2° elevation, its value now will be

$$\frac{1{\cdot}7}{1 - 0{\cdot}04} = \frac{1{\cdot}7}{0{\cdot}96} = 1{\cdot}77.$$

Try

$$C = 1{\cdot}77.$$

We now take the arc of the trajectory up to the highest point.

$$\tan\phi - \tan\theta = C \sec\eta\,(I_U - I_u),$$

and, of course, θ being equal to zero at vertex,

$$\tan\phi = C \sec\eta\,(I_U - I_{u_0}),$$

$$\therefore\ I_{u_0} = I_U - \frac{\tan\phi}{C \sec\eta}.$$

We know that

$$V = 1609, \quad T = 21{\cdot}13, \quad \phi = 16° 32',$$

$$\eta = \frac{\phi}{2} = 8° 16'.$$

$$\therefore\ U = V \cos\phi \sec\eta = 1559 \text{ f/s.}$$

$$\log V = 3{\cdot}2065560$$
$$\log \cos\phi = \bar{1}{\cdot}9816620$$
$$\log \sec\eta = 0{\cdot}0045361$$
$$\log U = 3{\cdot}1927541$$

$$\therefore\ I_{u_0} = I_{1559} - \frac{\tan 16° 32'}{1{\cdot}77 \sec 8° 16'} = I_{1559} - F, \text{ say,}$$

$$= 0{\cdot}866349 - 0{\cdot}1660$$
$$= 0{\cdot}700349$$
$$u_0 = 855 \text{ f/s.}$$

$$\log 1{\cdot}77 = 0{\cdot}2479733$$
$$\log \sec 8° 16' = 0{\cdot}0045361$$
$$0{\cdot}2525094$$
$$\log \tan 16° 32' = \bar{1}{\cdot}4725318$$
$$\log F = \bar{1}{\cdot}2200224$$

Digitized by Google

Now, using the formula

$$\frac{y_0}{x_0} = \tan\phi - C \sec\eta \left\{ I_U - \frac{A_U - A_{u_0}}{S_U - S_{u_0}} \right\},$$

$$A_{1559} = 8314{\cdot}08 \qquad S_{1559} = 43426{\cdot}5$$
$$A_{855} = 3649{\cdot}83 \qquad S_{855} = 37581{\cdot}8$$
$$\text{Difference} = 4664{\cdot}25 \qquad \text{Difference} = 5844{\cdot}7$$

$$\therefore \frac{A_U - A_{u_0}}{S_U - S_{u_0}} = 0{\cdot}7982.$$

$$I_{1559} = 0{\cdot}866349.$$

$$\therefore \frac{y_0}{x_0} = \tan 16^\circ 32' - 1{\cdot}77 \sec 8^\circ 16' \times 0{\cdot}068149$$
$$= 0{\cdot}2968464 - 0{\cdot}1220$$
$$= 0{\cdot}17485.$$

Having found $\frac{y_0}{x_0} = 0{\cdot}17485$, the next step is to find x_0.

$$x_0 = C \sec\eta \{S_U - S_{u_0}\}$$
$$= 10{,}470 \text{ feet (nearly)}.$$

$$\therefore y_0 = 10{,}470 \times 0{\cdot}17485$$
$$= 1829 \text{ feet.}$$

$$\log 10{,}470 = 4{\cdot}0197$$
$$\log 0{\cdot}17485 = \bar{1}{\cdot}2426$$
$$3{\cdot}2623$$

At the vertex the actual velocity is

$$v_0 = u_0 \cos\eta \sec\theta = u_0 \cos\eta$$
$$= 846 \text{ f/s (nearly)}.$$

To find the time to reach the highest point,

$$T_{1559} = 232{\cdot}4854$$
$$T_{855} = 227{\cdot}0629$$
$$\frac{t_0}{C} = 5{\cdot}4225$$
$$t_0 = 9{\cdot}6 \text{ seconds.}$$

Plotting the tangent elevations and ranges already found, it is found that the difference in elevation for the two ranges of 6000 and 6200 yards is about 50 minutes.

We therefore get an approximate angle of descent from

$$\tan\beta = \frac{6110 \tan 50'}{200}.$$

$$\log 6110 = 3{\cdot}7860$$
$$\log \tan 50' = \bar{2}{\cdot}1627$$
$$\text{by addition} = 1{\cdot}9487$$
$$\log 200 = 2{\cdot}3010$$
$$\therefore \log \tan\beta = \bar{1}{\cdot}6477$$
$$\beta = 24^\circ \text{ about.}$$

Digitized by Google

Try $\beta = 26°$ as the angle of descent at a range of 6100 yards, and take an arc for the descent over 0° to $-25°$, so as to locate the shot when descending at an angle of 26°.

$$\phi = 0, \quad \theta = -\beta = -26°.$$

Our value η' will be $-13°$; dropping the suffix we have our new $\eta = -13°$.

$$U_0 = v_0 \sec \eta = 846 \sec 13°.$$

$$\log 846 = 2{\cdot}9274$$
$$\log \sec 13° = 0{\cdot}0113$$
$$\log U_0 = 2{\cdot}9387$$

$U_0 = 868$ f/s.

We now use the formula

$$\tan \beta = C \sec \eta \, (I_{U_0} - I_u),$$

where u is the velocity at the point of impact, so that

$$I_u = I_{u_0} - \frac{\tan \beta}{C \sec \eta}.$$

$$\log C = 0{\cdot}2480$$
$$\log \sec 13° = 0{\cdot}0113$$
$$\text{by addition} = 0{\cdot}2593$$
$$\log \tan 26° = \bar{1}{\cdot}6882$$
$$\therefore \log \frac{\tan \beta}{C \sec \eta} = \bar{1}{\cdot}4289.$$
$$\therefore I_{u_0} = I_{868} = 0{\cdot}7106.$$
$$\therefore I_u = 0{\cdot}7106 - 0{\cdot}2685 = 0{\cdot}4421.$$
$$u = 653 \text{ f/s}.$$

To find the horizontal distance traversed in the descending branch, or

$$_0x_{26} = C \, (S_{U_0} - S_u).$$

$$S_{U_0} = S_{868} = 37815{\cdot}4$$
$$S_u = S_{653} = 33114{\cdot}2$$
$$\text{Difference} = 4701{\cdot}2$$

$$_0x_{26} = 1{\cdot}77 \times 4701{\cdot}2$$
$$= 8322 \text{ feet}.$$

$$\log 1{\cdot}77 = 0{\cdot}2480$$
$$\log 4701{\cdot}2 = 3{\cdot}6722$$
$$3{\cdot}9202$$

For the descending branch we have

$$\frac{y'_0}{x'_0} = C \sec \eta' \left[I_{U_0} - \frac{A_{U_0} - A_u}{S_{U_0} - S_u} \right].$$

$$A_{U_0} = A_{868} = 3814{\cdot}61$$
$$A_u = A_{653} = 1053{\cdot}89$$
$$2760{\cdot}72$$

$$S_{U_0} - S_u = 4701{\cdot}2.$$

Digitized by Google

$$\therefore \frac{y'_0}{x'_0} = 1{\cdot}77 \sec 13^\circ \left[0{\cdot}7106 - \frac{2760{\cdot}7}{4701{\cdot}2}\right]$$

$$= 1{\cdot}77 \sec 13^\circ \times 0{\cdot}1229$$

$$= 1858 \text{ feet.}$$

This is very near to the height previously found, namely, 1829 feet, so that an angle of descent of 26° is correct.

We have therefore established the following results:

$$\phi = 16^\circ\ 32'$$

$$\text{Range} = 10{,}470 + 8322 = 18{,}792 \text{ feet}$$

$$= 6264 \text{ yards}$$

[the measured range being 6210 yards].

Angle of descent 26°.

The time for the descending branch can be found in the same way as was done for the ascending branch; the two added together should be near to the time actually measured, namely, 21·13 seconds.

Examples.

From the following report work out the value of the ballistic coefficient, the muzzle velocity, the jump and the coefficient of reduction.

Report of experimental practice with 5-inch, 60-pr. B.L. gun.

Projectile: shrapnel shell, weighted and with plug, 60 lbs.

Charge: $9\frac{7}{16}$ lb. cordite, M.D. size 16, primed 12 drams, R.F.G.$_2$ at each end. Temperature 67°.

Barometer: 30·28 inches.

Thermometer: 66°.

Quadrant elevation to gun.	Quadrant depression to point struck.	Observed velocity at 145 feet.	Observed velocity at 3000 feet.
35′	7′·68	2077	1792
35′	7′·55	2086	1784
33′	7′·96	2058	1777
33′	10′·31	2056	1784

From the following report complete the Range Table for the 5-inch B.L. gun for the columns of—

Tangent elevation,
Remaining velocity,
Time of flight,
50 °/$_0$ length, breadth, and height zones,
5 minutes elevation or deflection alters point of impact in range and deflection.

Digitized by Google

REPORT OF EXPERIMENTAL PRACTICE WITH 5-INCH B.L. GUN.

Projectile: C.S., common shell, pointed, Mark I. Weight: 50 lb.
Charge: 5¼ lb. cordite, size 10. 10.4.00.

Number of rounds.	Elevation (quadrant).	Time of flight.	Range.	Error in range.	Lateral deviation.	Error in deviation.	Muzzle velocity.	Jump.	Axis of gun above sands.	Remarks.
	° ′	secs.	yards.	yards.	yards.	yards.	f/s.	min.	feet.	Barometer, 29·84.
5	0 10	5 rounds at 2″ × 9′ × 9′ wood target at 500 yards. Point of impact 6 feet above sands					1890	± 0	12·37	Thermometer, 53°.
5	2 0	4·21	2072	15·4	4·5	0·78			13·2	
5	5 0	8·99	3835	18·2	21·8	1·08			15·2	
5	8 0	13·14	5192	16·6	44·7	1·90			16·27	
5	12 0	18·26	6604	43·4	91·3	5·26			17·4	
5	15 0	21·89	7544	68·4	123·1	4·06			18·1	

Digitized by Google

RANGE TABLE FOR 4·7-INCH Q.F. GUNS, MARKS I TO IV.

Based on Practice and Calculation.

$$\frac{40185}{9079}\quad\frac{73}{4}\quad\frac{40185}{9587}$$
$$\overline{9387}\qquad\overline{2682}$$

(*Minutes* 31,709 *and* 44,500 XV.)

Charge, { weight, 5 lb. 7 oz.; gravimetric density, $\frac{54{\cdot}8}{0{\cdot}506}$; nature, cordite, size 20.

Projectile, { nature, common shell; weight, 45 lb.

Muzzle velocity, 2,150 f.s.

Nature of mounting, central pivot or travelling carriage.

Jump, 3½ minutes, negative.

Remaining velocity (actual).	5 minutes' elevation or deflection alters point of impact.		To strike an object 10 feet high, range must be known within	Angle of descent.	Elevation.	Range.	Fuze scale for fuze, time and percussion, middle, No. 54, Marks I*, II, or III.	50 per cent. of rounds should fall in			Time of flight.
	Range.	Vertically or laterally.						Length.	Breadth.	Height.	
f.s.	yds.	yds.	yds.	° ′	° ′	yds.		yds.	yds.	yds.	secs.
2150	...	...	...	...	...	0	...	...	...	...	...
2112	129	0·14	955	0 6	0 8	100	¼	...	...	...	0·1
2075	127	0·29	573	0 10	0 12	200	¾	...	...	..	0·3
2038	125	0·43	409	0 14	0 16	300	1	...	...	...	0·4
2002	123	0·58	317	0 18	0 20	400	1¼	...	...	...	0·6
1966	121	0·72	260	0 22	0 24	500	1¾	...	...	...	0·7
1930	119	0·87	220	0 26	0 28	600	2	16·5	0·20	0·14	0·9
1895	117	1·01	185	0 31	0 33	700	2¼	16·5	0·20	0·16	1·1
1860	115	1·16	158	0 36	0 38	800	2¾	16·5	0·20	0·18	1·3
1825	113	1·31	140	0 41	0 43	900	3	16·6	0·20	0·19	1·4
1791	111	1·45	125	0 46	0 48	1000	3½	16·6	0·20	0·20	1·6
1757	108	1·60	113	0 51	0 53	1100	3¾	16·6	0·21	0·21	1·8
1723	104	1·74	102	0 56	0 58	1200	4	16·7	0·22	0·22	2·0
1690	100	1·89	92	1 2	1 3	1300	4¼	16·7	0·23	0·26	2·1
1658	96	2·03	83	1 8	1 8	1400	4¾	16·7	0·24	0·30	2·3
1626	93	2·18	76	1 15	1 13	1500	5½	16 8	0·25	0·34	2·5
1595	91	2·32	69	1 23	1 18	1600	5¼	16·8	0·26	0·38	2·7
1564	89	2·47	63	1 31	1 23	1700	6	16·8	0·27	0·42	2·9
1534	86	2·61	57	1 40	1 28	1800	6¼	16·9	0·28	0·46	3·1
1505	84	2·76	52	1 49	1 33	1900	6¾	16·9	0·29	0·53	3·3
1476	81	2·91	48	1 59	1 38	2000	7	17·0	0·30	0·60	3·5
1448	79	3·05	45	2 10	1 44	2100	7¼	17·0	0·31	0·64	3·7
1421	77	3·20	42	2 20	1 50	2200	7¾	17·1	0·33	0·68	3·9
1394	75	3·34	39	2 31	1 56	2300	8¼	17·2	0·34	0·74	4·1
1368	73	3·49	36	2 42	2 2	2400	8¾	17·3	0·36	0·80	4·3
1343	71	3·63	33	2 54	2 8	2500	9	17·4	0·37	0·85	4·5
1318	69	3·78	31	3 6	2 15	2600	9¼	17·5	0·39	0·90	4·7
1294	67	3·92	29	3 19	2 22	2700	10	17·6	0·41	0·97	4·9
1271	65	4·07	27	3 32	2 29	2800	10¼	17·6	0·43	1·04	5·2
1249	63	4·21	25	3 46	2 36	2900	10¾	17·7	0·46	1·12	5·4
1227	61	4·36	23	4 0	2 44	3000	11¼	17·8	0·49	1·20	5·7
1206	60	4·51	21	4 14	2 52	3100	11¾	17·9	0·52	1·29	6·0
1186	59	4·65	20	4 29	3 0	3200	12¼	17·9	0·55	1·38	6·2
1167	58	4·80	19	4 44	3 8	3300	12¾	18·0	0·58	1·47	6·4
1148	56	4·94	18	5 0	3 16	3400	13¼	18·1	0·61	1·55	6·7
1130	55	5·09	18	5 16	3 26	3500	13¾	18·2	0·64	1·65	7·0

Digitized by Google

Range Table for 4·7-inch Q.F. Guns, Marks I to IV—*continued.*

Remaining velocity (actual).	5 minutes' elevation or deflection alters point of impact.		To strike an object 10 feet high, range must be known within	Angle of descent.	Elevation.	Range.	Fuze scale for fuze, time and percussion, middle, No. 54, Marks I*, II, or III.	50 per cent. of rounds should fall in			Time of flight.
	Range.	Vertically or laterally.						Length.	Breadth.	Height.	
f.s.	yds.	yds.	yds.	° ′	° ′	yds.		yds.	yds.	yds.	secs.
1113	54	5·23	17	5 33	3 36	3600	14½	18·2	0·68	1·75	7·3
1097	52	5·38	16	5 50	3 46	3700	14¾	18·3	0·72	1·85	7·5
1081	51	5·52	15	6 8	3 56	3800	15¼	18·4	0·77	1·95	7·8
1066	50	5·67	15	6 26	4 6	3900	15⅝	18·5	0·81	2·07	8·1
1052	49	5·81	14	6 44	4 16	4000	16¼	18·5	0·86	2·20	8·4
1038	48	5·96	13	7 2	4 26	4100	17	18·6	0·91	2·30	8·7
1025	47	6·11	13	7 21	4 36	4200	17½	18·7	0·97	2·40	9·0
1013	46	6·25	12	7 40	4 46	4300	18	18·8	1·03	2·54	9·3
1001	45	6·40	12	7 59	4 57	4400	18¾	18·9	1·10	2·68	9·6
990	45	6·54	11	8 19	5 9	4500	19¼	19·0	1·17	2·81	9·9
979	44	6·69	11	8 39	5 21	4600	20	19·2	1·24	2·95	10·2
969	43	6·83	10	9 0	5 33	4700	20½	19·4	1·32	3·10	10·5
960	42	6·98	10	9 21	5 45	4800	21½	19·6	1·40	3·26	10·8
951	41	7·13	10	9 42	5 57	4900	21¾	19·8	1·48	3·43	11·1
942	41	7·27	9	10 3	6 9	5000	22½	20·0	1·57	3·60	11·4
934	40	7·42	9	10 25	6 22	5100	23	20·3	1·65	3·77	11·7
926	39	7·56	9	10 48	6 35	5200	23¾	20·7	1·74	3·95	12·0
919	39	7·71	8	11 11	6 48	5300	24½	21·0	1·83	4·16	12·3
912	38	7·85	8	11 34	7 1	5400	25¼	21·4	1·93	4·34	12·6
905	38	8·00	8	11 57	7 14	5500	25¾	21·7	2·04	4·57	12·9
899	37	8·14	8	12 21	7 27	5600	26½	22·1	2·15	4·80	13 5
893	36	8·29	7	12 45	7 40	5700	27¼	22·4	2·26	5·05	13·8
888	36	8·43	7	13 9	7 54	5800	28	22·8	2·38	5·30	14·1
883	35	8·58	7	13 34	8 8	5900	28¾	23·2	2·50	5·61	14·4
878	34	8·73	7	14 0	8 22	6000	29⅝	23·7	2·63	5·92	14·7
873	34	8·87	6	14 26	8 37	6100	...	24·3	2·76	6·26	15·0
869	33	9·01	6	14 53	8 52	6200	...	24·9	2·89	6·60	15·3
865	33	9·16	6	15 20	9 7	6300	...	25·6	3·03	7·00	15·6
861	32	9·30	6	15 48	9 22	6400	...	26·3	3·17	7·40	15·9
857	32	9·45	6	16 16	9 37	6500	...	27·1	3·32	7·84	16·2
853	31	9·60	5	16 44	9 53	6600	...	27·9	3·47	8·28	16·6
849	31	9·74	5	17 13	10 9	6700	...	28·8	3·63	8·79	16·9
846	30	9·89	5	17 42	10 25	6800	...	29·7	3·80	9·30	17·3
842	30	10·03	5	18 12	10 42	6900	...	30·7	3·97	9·90	17·6
839	29	10·18	5	18 42	10 59	7000	...	31·7	4·15	10·50	18·0
836	29	10·32	5	19 12	11 16	7100	...	32·7	4·34	11·37	18·3
833	29	10·46	5	19 43	11 33	7200	...	33·7	4·53	12·25	18·7
830	28	10·60	5	20 14	11 50	7300	...	34·8	4·73	13·12	19·0
827	28	10·75	4	20 46	12 8	7400	...	35·9	4·93	14·00	19·4
824	27	10·89	4	21 18	12 26	7500	...	37·1	5·14	14·90	19·7
821	27	11·04	4	21 50	12 45	7600	...	38·3	5·35	15·80	20·1
818	26	11·19	4	22 23	13 4	7700	...	39·6	5·57	16·80	20·5
816	26	11·34	4	22 56	13 23	7800	...	40·9	5·79	17·80	20·9
813	25	11·48	4	23 30	13 42	7900	...	42·3	6·02	18·60	21·3
811	25	11·63	4	24 4	14 1	8000	...	43·7	6·25	19·40	21·7
809	25	11·77	4	24 38	14 21	8100	...	45·2	6·49	20·70	22·1
807	25	11·92	3	25 13	14 41	8200	...	46·7	6·73	22·00	22·5
805	24	12·07	3	25 48	15 1	8300	...	48·3	6·97	23·50	22·9
803	24	12·22	3	26 24	15 21	8400	...	49·9	7·22	25·00	23·3
801	24	12·36	3	26 59	15 42	8500	...	51·6	7·47	26·60	23·7
800	23	12·51	3	27 35	16 3	8600	...	53·4	7·73	28·20	24·1
799	23	12·65	3	28 11	16 24	8700	...	55·3	7·99	30 10	24·5
798	23	12·80	3	28 47	16 46	8800	...	57·2	8·26	32·00	25·0
797	22	12·94	3	29 24	17 8	8900	...	59·2	8·53	34·00	25·4
796	22	13·09	3	30 1	17 30	9000	...	61·2	8·80	36 00	25·8

Digitized by Google

Range Table for 4·7-inch Q.F. Guns, Marks I to IV—*continued.*

Remaining velocity (actual).	5 minutes' elevation or deflection alters point of impact.		To strike an object 10 feet high, range must be known within	Angle of descent.	Elevation.	Range.	Fuze scale for fuze, time and percussion, middle, No. 54, Marks I*, II, or III.	50 per cent. of rounds should fall in			Time of flight.
	Range.	Vertically or laterally.						Length.	Breadth.	Height.	
f.s.	yds.	yds.	yds.	° ′	° ′	yds.		yds.	yds.	yds.	secs.
795	22	13·24	3	30 39	17 53	9100	...	63·2	9·07	38·00	26·2
794	22	13·38	3	31 18	18 16	9200	...	65·2	9·34	40·00	26·7
793	21	13·53	3	31 58	18 39	9300	...	67·3	9·61	42·50	27·1
792	21	13·67	3	32 38	19 3	9400	...	69·4	9·89	45·00	27·5
791	21	13·81	2	33 19	19 27	9500	...	71·5	10·17	47·50	27·9
790	21	13·96	2	34 0	19 51	9600	...	73·6	10·45	50·00	28·4
789	21	14·11	2	34 41	20 15	9700	...	75·7	10·73	52·75	28·8
788	21	14·26	2	35 22	20 39	9800	...	77·8	11·02	55·50	29·2
787	21	14·40	2	36 3	21 3	9900	...	78·9	11·31	58·50	29·6
786	20	14·55	2	36 45	21 28	10000	...	80·0	11·61	61·50	30·1
785	20	14·69	2	37 27	21 53	10100	...	...	...	...	30·5
784	20	14·84	2	38 9	22 18	10200	...	...	...	...	31·0
783	19	14·98	2	38 51	22 44	10300	...	...	...	...	31·4
782	19	15·13	2	39 33	23 10	10400	...	...	...	...	31·9
781	19	15·27	2	40 15	23 36	10500	...	...	...	...	32·3
780	18	15·42	2	40 58	24 3	10600	...	...	...	...	32·8
779	18	15·56	2	41 40	24 30	10700	...	...	...	...	33·2
778	18	15·71	2	42 23	24 58	10800	...	...	...	...	33·7
777	18	15·85	2	43 6	25 27	10900	...	...	...	...	34·1
776	17	16·00	2	43 49	25 56	11000	...	...	...	...	34·6
775	17	16·14	2	44 32	26 26	11100	...	...	...	...	35·0
774	17	16·29	2	45 16	26 57	11200	...	...	...	...	35·5
773	17	16·43	2	46 0	27 28	11300	...	...	...	...	35·9
772	17	16·58	2	46 44	28 0	11400	...	...	...	...	36·4
771	16	16·72	2	47 29	28 32	11500	...	...	...	...	36·9
770	16	16·87	1·50	48 14	29 4	11600	...	...	...	...	37·4
769	16	17·01	1·45	49 0	29 36	11700	...	...	...	...	37·9
768	16	17·16	1·40	49 46	30 8	11800	...	...	...	...	38·4

Digitized by Google

RANGE TABLE FOR 6-INCH B.L. GUN, MARK VII (FOR LAND SERVICE).

Based on Practice of 7.5.00, previous to which the gun had fired 8 proof and 7 full charges.

Minutes 49,349 III, 49,350, 52,791 II. 40185/9758

Charges, weight, 20 lb., cordite, size 20. gravimetric density, $\frac{85 \cdot 75}{0 \cdot 324}$. weight, 23 lb., cordite M.D., size 16. gravimetric density, $\frac{74 \cdot 5}{0 \cdot 372}$.

Projectile, nature, cast steel common shell, Mark I, pointed. weight, 100 lb.

Muzzle velocity, 2,493 f.s., at 60° Fahr.

Nature of mounting, pedestal.

Jump, +3 minutes.

Remaining velocity (actual).	To strike an object 10 feet high, range must be known within	Angle of descent.	5 minutes elevation or deflection alters point of impact.		Elevation.	Range.	Fuze scale for fuze, time and percussion, middle, No. 54, Marks I*, II and III.	50 per cent. of rounds should fall in			Time of flight.	Penetration into wrought iron.
			Range.	Vertically or laterally.				Length.	Breadth.	Height.		
f.s.	yds.	° ′	yds.	yds.	° ′	yds.		yds.	yds.	yds.	secs.	ins.
2493	...	...	...	...	...	0		...	...	...	...	..
2464	1910	0 3	168	0·14	0 0	100	...	...	...	...	0·13	18·9
2435	955	0 6	166	0·29	0 3	200	¼	...	...	...	0·26	18·5
2405	637	0 9	164	0·43	0 6	300	½	...	...	...	0·39	18·2
2376	441	0 13	162	0·58	0 10	400	¾	...	...	...	0·52	17·9
2347	337	0 17	160	0·72	0 13	500	1	...	...	...	0·65	17·5
2318	286	0 20	158	0·87	0 16	600	1¼	21·6	0·74	0·13	0·78	17·2
2289	249	0 23	156	1·01	0 19	700	1½	21·7	0·75	0·14	0·91	16·8
2260	212	0 27	154	1·16	0 22	800	2	21·8	0·77	0·17	1·04	16·5
2231	185	0 31	152	1·31	0 25	900	2½	21·9	0·78	0·20	1·17	16·1
2202	164	0 35	150	1·45	0 28	1000	2½	22·0	0·80	0·22	1·31	15·8
2173	151	0 38	148	1·60	0 31	1100	3	22·1	0·81	0·25	1·45	15·5
2144	136	0 42	146	1·74	0 34	1200	3½	22·2	0·83	0·27	1·59	15·2
2115	125	0 46	144	1·89	0 37	1300	3¾	22·3	0·84	0·30	1·73	14·9
2087	115	0 50	142	2·03	0 40	1400	4	22·4	0·86	0·33	1·88	14·6
2059	106	0 54	140	2·18	0 43	1500	4¼	22·5	0·88	0·35	2·02	14 3
2032	97	0 59	138	2·32	0 47	1600	4½	22·6	0·90	0·39	2·17	14·0
2005	91	1 3	136	2·47	0 50	1700	5	22·7	0·92	0·42	2·32	13·7
1978	84	1 8	134	2·61	0 54	1800	5¼	22·8	0·95	0·46	2·47	13·5
1951	79	1 13	132	2·76	0 57	1900	5½	22·9	0·97	0·49	2·62	13·2
1924	74	1 18	130	2·91	1 1	2000	6	23·0	1·00	0·52	2·78	13·0
1897	69	1 23	128	3·05	1 4	2100	6¼	23·1	1·03	0·56	2·94	12·7
1871	65	1 28	126	3·20	1 8	2200	6½	23·2	1·07	0·60	3·10	12·5
1845	62	1 33	124	3·34	1 12	2300	7	23·3	1·11	0·64	3·26	12·2
1820	58	1 39	122	3·49	1 16	2400	7¼	23·4	1·15	0·68	3·42	12·0
1795	55	1 45	120	3·63	1 20	2500	7¾	23·5	1·19	0·72	3·58	11·7
1770	52	1 51	118	3·78	1 24	2600	8	23·6	1·24	0·76	3·75	11·5
1746	49	1 57	116	3·92	1 28	2700	8½	23·7	1·29	0·80	3·92	11·3
1722	47	2 3	114	4·07	1 32	2800	8¾	23·8	1·34	0·85	4·09	11·1
1699	44	2 10	112	4·21	1 36	2900	9¼	23·9	1·39	0·90	4·26	10·9
1676	42	2 17	110	4·36	1 40	3000	9½	24·0	1·45	0·95	4 44	10·7

Digitized by Google

Range Table for 6-inch B.L. Gun, Mark VII (for Land Service)—*continued.*

Remaining velocity (actual).	To strike an object 10 feet high, range must be known within	Angle of descent.	5 minutes elevation or deflection alters point of impact.		Elevation.	Range.	Fuze scale for fuze, time and percussion, middle, No. 54, Marks I*, II and III.	50 per cent. of rounds should fall in			Time of flight.	Penetration into wrought iron.
			Range.	Vertically or laterally.				Length.	Breadth.	Height.		
f.s.	yds.	° ′	yds.	yds.	° ′	yds.		yds.	yds.	yds.	secs.	ins.
1653	40	2 24	108	4·51	1 45	3100	10	24 1	1·51	1·01	4·62	10·5
1631	38	2 31	106	4·65	1 50	3200	10½	24·2	1·57	1·06	4·80	10·3
1609	36	2 38	104	4·80	1 55	3300	10⅞	24·3	1·64	1·12	4·99	10·1
1587	35	2 46	102	4·94	2 0	3400	11¼	24·4	1·71	1·18	5·18	10·0
1565	33	2 54	100	5·09	2 5	3500	11⅝	24·5	1·78	1·24	5·38	9·8
1544	31	3 3	98	5·23	2 10	3600	12	24·6	1·86	1·31	5·58	9·7
1523	30	3 12	96	5·38	2 15	3700	12⅜	24·7	1·94	1·38	5·78	9·5
1503	29	3 21	94	5·52	2 21	3800	13¼	24·8	2·02	1·45	5·99	9·4
1483	27	3 30	92	5·67	2 26	3900	13½	24·9	2·10	1·52	6·19	9·2
1464	26	3 40	90	5·81	2 32	4000	14	25·0	2·20	1·60	6·41	9·1
1445	25	3 50	88	5·96	2 38	4100	14½	25·1	2·30	1·68	6·62	8·9
1427	24	4 1	86	6·11	2 44	4200	15	25·2	2·40	1·76	6·84	8·8
1409	23	4 11	84	6·25	2 50	4300	15⅜	25·3	2·50	1·85	7·06	8·7
1392	22	4 22	83	6·40	2 56	4400	16	25·4	2·60	1·93	7·28	8·6
1375	21	4 33	81	6·54	3 2	4500	16½	25·5	2·70	2·02	7·50	8·4
1358	20	4 45	79	6·69	3 8	4600	17	25·6	2·80	2·11	7·72	8·3
1341	19	4 57	78	6·83	3 14	4700	17½	25·7	2·90	2·21	7·94	8·2
1325	19	5 10	77	6·98	3 20	4800	18¼	25·8	3·01	2·32	8·17	8·1
1309	18	5 23	76	7·13	3 26	4900	18⅝	25·9	3·12	2·43	8·40	8·0
1293	17	5 36	75	7·27	3 33	5000	19¼	26·0	3·23	2·54	8·63	7·9
1278	16	5 49	73	7·42	3 40	5100	19⅝	26·2	3·34	2·65	8·86	7·8
1264	16	6 3	72	7·56	3 47	5200	20¼	26·4	3·46	2·78	9·10	7·7
1250	15	6 17	71	7·71	3 54	5300	20⅝	26·6	3·58	2·93	9·34	7·6
1236	15	6 31	70	7·85	4 1	5400	21¼	26·9	3·70	3·07	9·59	7·5
1223	14	6 45	69	8·00	4 8	5500	22	27·2	3·82	3·22	9·84	7·4
1210	14	7 0	67	8·14	4 15	5600	22½	27·5	3·95	3·38	10·09	7·4
1198	13	7 15	65	8·29	4 22	5700	23	28·0	4·07	3·56	10·34	7·3
1186	13	7 30	64	8·43	4 30	5800	23⅝	28·5	4·20	3·75	10·60	7·2
1174	12	7 46	63	8·58	4 38	5900	24¼	29·0	4·33	3·96	10·86	7·1
1163	12	8 2	62	8·73	4 46	6000	24⅝	29·5	4·46	4·17	11·13	7·1
1152	11	8 18	61	8·87	4 54	6100	25¼	30·1	4·59	4·40	11·40	7·0
1141	11	8 35	60	9·01	5 3	6200	26	30·8	4·72	4·65	11·67	6·9
1131	11	8 52	59	9·16	5 12	6300	26⅜	31·5	4·85	4·92	11·94	6·8
1121	10	9 9	58	9·30	5 21	6400	27¼	32·2	4·99	5·20	12·22	6·8
1111	10	9 27	57	9·45	5 30	6500	28	33·0	5·13	5·50	12·50	6·7
1102	10	9 45	56	9·60	5 39	6600	28⅜	33·8	5·27	5·82	12·78	6·6
1093	9	10 3	55	9·74	5 48	6700	29¼	34·7	5·41	6·15	13·06	6·6
1084	9	10 22	54	9·89	5 57	6800	29⅝	35·6	5·55	6·51	13·35	6·5
1075	9	10 41	53	10·03	6 6	6900	...	36·5	5·68	6·89	13·63	6·5
1067	9	11 0	52	10·18	6 16	7000	...	37·4	5·83	7·28	13·92	6·4
1059	8	11 19	52	10·32	6 25	7100	...	38·3	5·97	7·67	14·21	6·4
1051	8	11 39	51	10·46	6 35	7200	...	39·3	6·11	8·16	14·50	6·3
1044	8	11 59	51	10·60	6 45	7300	...	40·3	6·25	8·56	14·79	6·3
1037	8	12 19	50	10·75	6 55	7400	...	41·3	6·39	9·02	15·09	6·2
1031	7	12 39	49	10·89	7 5	7500	...	42·3	6·53	9·50	15·39	6·2
1025	7	13 0	48	11·04	7 15	7600	...	43·3	6·68	10·01	15·69	6·1
1019	7	13 21	47	11·19	7 25	7700	...	44·4	6·82	10·55	15·99	6·1
1013	7	13 42	47	11·34	7 36	7800	...	45·5	6·97	11·09	16·30	6·0
1007	7	14 3	46	11·48	7 47	7900	...	46·6	7·12	11·64	16·60	6·0
1002	6	14 24	45	11·63	7 58	8000	...	47·8	7·28	12·25	16·91	5·9
996	6	14 45	45	11·77	8 9	8100	...	49·0	7·43	12·90	17·22	5·9
991	6	15 7	44	11·92	8 20	8200	...	50·3	7·59	13·57	17·53	5·9
986	6	15 29	44	12·07	8 31	8300	...	51·5	7·74	14·26	17·84	5·8
982	6	15 51	43	12·22	8 43	8400	...	52·8	7·90	14·98	18·15	5·8
977	6	16 14	43	12·36	8 54	8500	...	54·1	8·06	15·72	18·46	5·8

Digitized by Google

Range Table for 6-inch B.L. Gun, Mark VII (for Land Service)—*continued.*

Remaining velocity (actual).	To strike an object 10 feet high, range must be known within	Angle of descent.	5 minutes elevation or deflection alters point of impact.		Elevation.	Range.	Fuze scale for fuze, time and percussion, middle, No. 54, Marks I*, II and III.	50 per cent. of rounds should fall in			Time of flight.	Penetration into wrought iron.
			Range.	Vertically or laterally.				Length.	Breadth.	Height.		
f.s.	yds.	° ′	yds.	yds.	° ′	yds.		yds.	yds.	yds.	secs.	ins.
973	6	16 37	42	12·51	9 6	8600	...	55·4	8·22	16·5	18·78	5·2
968	5	17 0	42	12·65	9 18	8700	...	56·7	8·38	17·3	19·09	5·7
964	5	17 23	41	12·80	9 30	8800	...	58·0	8·55	18·1	19·41	5·7
960	5	17 46	41	12·94	9 42	8900	...	59·3	8·72	19·0	19·73	5·7
957	5	18 10	40	13·09	9 55	9000	...	60·7	8·89	19·9	20·05	5·7
953	5	18 34	40	13·24	10 7	9100	...	62·1	9·06	20·8	20·37	5·7
950	5	18 58	39	13·38	10 20	9200	...	63·5	9·23	21·8	20·70	5·6
947	5	19 23	39	13·53	10 33	9300	...	64·9	9·41	22·8	21·03	5·6
944	5	19 48	38	13·67	10 46	9400	...	66·4	9·59	23·9	21·36	5·6
941	5	20 13	38	13·81	10 59	9500	...	67·8	9·77	25·0	21·69	5·6
938	4	20 38	38	13·96	11 12	9600	...	69·3	9·95	26·1	22·02	5·5
935	4	21 4	37	14·11	11 25	9700	...	70·7	10·13	27·2	22·35	5·5
933	4	21 30	37	14·26	11 39	9800	...	72·2	10·32	28·4	22·68	5·5
930	4	21 56	37	14·40	11 52	9900	...	73·7	10·51	29·6	23·01	5·5
927	4	22 22	36	14·55	12 6	10000	...	75·2	10·70	30·9	23·34	5·4
925	4	22 46	36	14·69	12 20	10100	...	76·8	10·90	32·2	23·67	5·4
923	4	23 14	36	14·84	12 34	10200	...	78·4	11·10	33·6	24·00	5·4
921	4	23 41	35	14·98	12 48	10300	...	80·0	11·30	35·1	24·33	5·4
920	4	24 8	35	15·13	13 2	10400	...	81·7	11·50	36·6	24·67	5·3
918	4	24 35	35	15·27	13 16	10500	...	83·4	11·70	38·1	25·01	5·3
917	4	25 2	35	15·42	13 30	10600	...	85·1	11·90	39·7	25·35	5·3
915	4	25 29	34	15·56	13 44	10700	...	86·8	12·10	41·4	25·69	5·3
914	3	25 57	34	15·71	13 58	10800	...	88·6	12·30	43·1	26·04	5·3
912	3	26 24	34	15·85	14 12	10900	...	90·4	12·50	44·8	26·39	5·3
911	3	26 52	33	16·00	14 26	11000	...	92·2	12·70	46·7	26·74	5·3
909	3	27 19	33	16·14	14 40	11100	...	94·0	12·90	48·7	27·09	5·3
908	3	27 47	33	16·29	14 55	11200	...	95·9	13·10	50·6	27·45	5·3
906	3	28 15	33	16·43	15 10	11300	...	97·8	13·30	52·5	27·81	5·3
905	3	28 43	32	16·58	15 25	11400	...	99·7	13·50	54·6	28·17	5·2
903	3	29 10	32	16·72	15 40	11500	...	101·6	13·70	56·7	28·53	5·2
902	3	29 38	32	11·87	15 56	11600	...	103·6	13·90	58·9	28·90	5·2
900	3	30 6	32	17·01	16 12	11700	...	105·6	14·11	61·2	29·27	5·2
899	3	30 34	31	17·16	16 28	11800	...	107·6	14·32	63·6	29·64	5·2
898	3	31 2	31	17·30	16 44	11900	...	109·6	14·43	66·0	30·01	5·2
897	3	31 30	31	17·45	17 0	12000	...	111·6	14·74	68·5	30·39	5·2

NOTE.—A change of temperature of the charge of ±10 degrees Fahr. alters the M.V. by about { ±15 f.s. for 20 lb. cordite, / ±11·3 f.s. for 23 lb. cordite, M.D. }. These variations may be expected to affect the range as follows :—

Range.	20 lb. cordite.	23 lb. cordite, M.D.
yards	yards	yards
1000	10	7·5
2000	19	14
4000	34	26
6000	44	33
10000	51	38
12000	53	40

Digitized by Google

SECTION 4.—UNRESISTED MOTION OF A PROJECTILE.

Although the preceding problems and illustrations of artillery fire have shown that the force of gravity is usually a comparatively small effect in comparison with the resistance of the air, insomuch that it may be neglected in a calculation to a first approximation of the trajectory, occasions may still arise where it is the resistance of the air which is the negligible quantity, as in the case of high-angle howitzer fire, with heavy projectiles, and small charges and low initial velocities.

For this reason it is advisable to add a short account of the theory of the motion of an unresisted projectile in accordance with the principles discovered by Galileo in 1638.

Fig. 1.

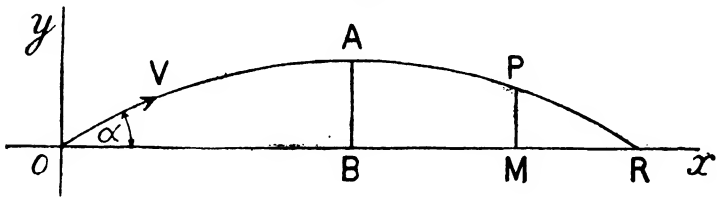

The shot is supposed to be projected with velocity V f/s at an elevation α, and to have advanced a horizontal distance OM $= x$ feet and to have ascended a vertical height MP $= y$ feet, in t seconds from leaving the muzzle (fig. 1).

Then
$$\text{OM} = x = \text{V}t\cos\alpha$$
$$\text{MP} = y = \text{V}t\sin\alpha - \tfrac{1}{2}gt^2;$$

in accordance with the laws of motion; the horizontal velocity V cos α of the shot remaining unaltered during the flight, while the vertical velocity diminishes from

$$\text{V}\sin\alpha \text{ to } \text{V}\sin\alpha - gt, \text{ in } t \text{ seconds.}$$

If T denotes the time of flight down to the ground again, taking the ground as horizontal, and if the range over the ground is X feet, then, putting $y = 0$, we find

$$\text{T} = \frac{2\text{V}\sin\alpha}{g},$$

and
$$\text{X} = \text{VT}\cos\alpha = \frac{\text{V}^2\sin 2\alpha}{g},$$

so that
$$\sin 2\alpha = \frac{g\text{X}}{\text{V}^2},$$
$$\text{V} = \sqrt{(\text{X}g\operatorname{cosec} 2\alpha)},$$

giving the requisite elevation α to attain a range of X feet, with an initial velocity V f/s, or the velocity V required to attain a range X with elevation α; and then

$$\text{T} = \sqrt{\frac{2\text{X}\tan\alpha}{g}}.$$

Digitized by Google

Also

$$V \sin \alpha = \tfrac{1}{2}gT,$$

so that

$$y = \tfrac{1}{2}gTt - g\tfrac{1}{2}t^2$$
$$= \tfrac{1}{2}gt\,(T - t) = \tfrac{1}{2}gtt',$$

if $t' = T - t$;

so that with $g = 32$,

$$y = 16tt',$$

Colonel Sladen's formula employed in the preceding examples for plotting ordinates of a trajectory.

At the highest point of the trajectory, where $y = H$, suppose,

$$t = t' = \tfrac{1}{2}T,$$

so that $$H = \tfrac{1}{8}gT^2 = 4T^2 = (2T)^2;$$

hence the practical rule, "the square of twice the time of flight in seconds is the greatest height ascended in feet."

Since $$T = \sqrt{\frac{2X \tan \alpha}{g}},$$

$$\therefore H = 4T^2 = 4 . \frac{2X \tan \alpha}{g}$$
$$= \frac{X}{4} \tan \alpha . \text{ [taking } g = 32].$$

We have therefore, for a given range of X feet,

$$V = \sqrt{Xg \operatorname{cosec} 2\alpha}$$
$$H = \frac{X}{4} \tan \alpha$$
$$T = \sqrt{\frac{2X \tan \alpha}{g}}.$$

These three formulæ will be made use of for finding the limits within which the real trajectory in a resisting medium must lie.

For instance, in the Jubilee rounds, fired in 1888, a time of flight of nearly 70 seconds was observed in a range of 12 miles; the rule would make the height ascended about 19,600 feet—more than the height of Mont Blanc.

Since $$t = \frac{x}{V \cos \alpha},$$

therefore $$y = x \tan \alpha - \frac{gx^2}{2V^2 \cos^2 \alpha},$$

the invariable relation connecting the co-ordinates x and y of a shot moving in the trajectory; and the form of this equation shows that the curve is a *parabola*, in accordance with the principles of co-ordinate geometry.

Putting $y = 0$ gives the range

$$X = \frac{2V^2 \sin \alpha \cos \alpha}{g},$$

Digitized by Google

as before; while putting $x = \frac{1}{2}X$ gives the greatest height,

$$H = \tfrac{1}{4}X \tan \alpha.$$

The equation

$$y = x \tan \alpha - \frac{gx^2}{2V^2 \cos^2 \alpha}$$

reduces to

$$\left(x - \frac{V^2}{g} \sin \alpha \cos \alpha\right)^2 = -\frac{2V^2}{g} \cos^2 \alpha \left(y - \frac{V^2 \sin^2 \alpha}{2g}\right),$$

which is of the form

$$(x - h)^2 = -2l(y - K).$$

The equation of a parabola, whose axis is vertical, and vertex at the highest point (h, K), where

$$h = \frac{V^2}{2g} \sin 2\alpha, \qquad K = \frac{V^2}{2g} \sin^2 \alpha.$$

When referred to the highest point as origin, the equation becomes

$$x^2 = 2ly,$$

so that the Latus Rectum is $2l = \dfrac{2V^2}{g} \cos^2 \alpha$.

The use of the parabolic theory will now be shown for assigning limits within which the real trajectory in a resisting medium must lie.

If V, v denote the initial and final velocities, and α, β denote the angles of projection and of descent in a real trajectory over a range of X feet, then this trajectory lies between two parabolic trajectories, having angles of departure α and β.

The range being X feet, one parabola has an angle of projection α, let the initial velocity be U_1 for the parabolic theory; similarly for the other parabola, the range is X feet, the angle of projection is β, let the initial velocity be U_2; then, taking α as less than β,

$$U_1 = \sqrt{Xg \operatorname{cosec} 2\alpha} \qquad U_2 = \sqrt{Xg \operatorname{cosec} 2\beta},$$

$$H_1 = \frac{X}{4} \tan \alpha \qquad H_2 = \frac{X}{4} \tan \beta,$$

$$T_1 = \sqrt{\frac{2X \tan \alpha}{g}} \qquad T_2 = \sqrt{\frac{2X \tan \beta}{g}}.$$

The height of the trajectory H lies between the heights of the parabolas, and therefore

$$\tfrac{1}{4}X \tan \beta > H > \tfrac{1}{4}R \tan \alpha.$$

The time of flight, T, lies between the parabolic times of flight, and therefore

$$\sqrt{\frac{2X \tan \beta}{g}} > T > \sqrt{\frac{2X \tan \alpha}{g}},$$

Also $\qquad V > \sqrt{(Xg \operatorname{cosec} 2\alpha)}, \; v < \sqrt{(Xg \operatorname{cosec} 2\beta)}.$

Digitized by Google

Thus, in fig. 2, let GT represent the range X feet; let C be the mid point of GT and draw through C a line perpendicular to GT.

Make the angle $TGB_1 = \alpha = 40°$, then the vertex of the parabola GH_1T is at H_1, which is the mid point of B_1C (property of a parabola), and GB_1 is the tangent at G; and if $TGB_2 = 54° = \beta$, then H_2, the mid point of B_2C, is the vertex of the parabola GH_2T, and GB_2 is the tangent at G. The real trajectory, which is the curve GHT, is such that it lies altogether between the two parabolas, the trajectory

Fig. 2.

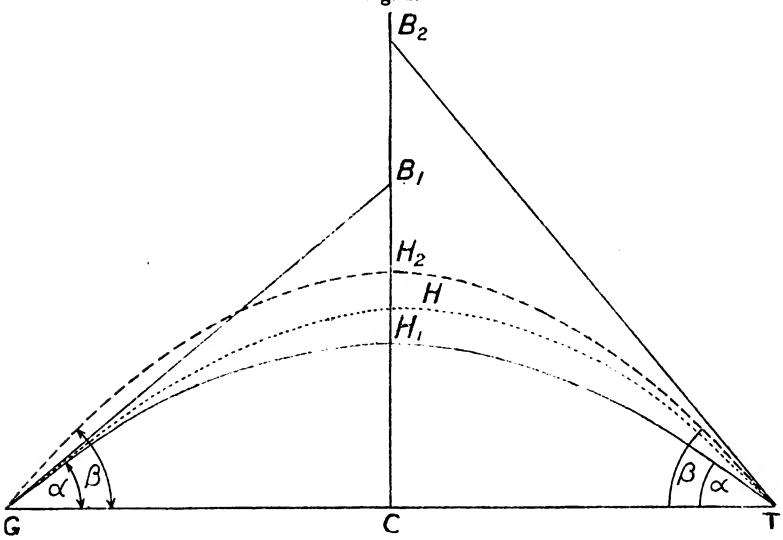

at the beginning coalesces with the lower parabola, then rises above it and at the end coalesces with the higher parabola. The highest point, H, of the real trajectory is at half time and lies between H_1 and H_2, but a little to the right of the line H_1H_2, because it lies a little beyond the half distance of the trajectory.

Thus in the trajectory of the projectile weighing 380 lbs., fired at 40° elevation from the 9·2-inch wire gun, with velocity 2375 f/s. Lieutenant Wolley Dod, R.A., found by calculation ("Proc. R.A. Institution," vol. xvi) a range of 20,765 yards, a height of vertex 17,110 feet; an angle of descent 53° 50′; time of flight 63·8 seconds; and final velocity 1090 f/s.

Here X = 62,295 feet, H = 17,110:

$$\alpha = 40°, \beta = 53° 50', T = 63{\cdot}8 \text{ seconds.}$$

Working with these data,

$$\tfrac{1}{4}X \tan \alpha = 13{,}068, \tfrac{1}{4}X \tan \beta = 21{,}305,$$

the mean being 17,180 feet;

$$\sqrt{\frac{2X \tan \alpha}{g}} = 57, \qquad \sqrt{\frac{2X \tan \beta}{g}} = 73,$$

the mean being 65 seconds, thus exhibiting on the largest scale the limits of the approximation.

As numerical exercises on the parabolic theory, the range tables of howitzers for low initial velocities may be calculated to a first approximation.

Digitized by Google

CHAPTER III.—ACCURACY.

SECTION I.—LAYING.

All guns are mounted in such a way that two motions can be given to the axis of the piece, viz., motion in a vertical plane, usually termed elevation; and motion in a horizontal plane, usually termed training. The former is always effected by mechanism, the latter is carried out sometimes by hand and sometimes by mechanism. When a gun is elevated and trained for the purpose of hitting some target, it is said to be "laid."

Causes affecting the Motion of a Projectile.

The motion of a projectile, referred to the vertical plane of departure, is affected by the following causes:—

1. Resistance of the air.
2. The force of gravity.
3. Wind, blowing up or down the line of fire: this, in the case of artillery fire, is usually neglected.

The united effect of 1 and 2 has already been discussed in Chapter II, where it is shown that for given ballistics an angle of tangent elevation can be found for each range.

The motion of the projectile out of the plane of departure referred to the horizontal plane is affected by the following causes:—

1. Drift.

This is an effect observable with all rifled guns, by which the shot is deflected in its flight more or less from the vertical plane of fire; the deflection is to the right when the gun is rifled with a twist on a right-handed screw, to the left with a left-handed twist.

Thus it was found by Mr. Rigby, Superintendent R.S.A.F., Enfield, that with two barrels rifled respectively, with right and left-handed twists, and laid parallel, the bullets struck on a target at 1000 yards on an average 15 inches farther apart than the muzzles, showing that the *drift* of the rifle bullet at this range is about $7\frac{1}{2}$ inches.

In artillery the right-handed twist is always employed; but small arms are now rifled with a left-handed twist.

The drift increases rapidly with the elevation and range of the gun; thus it was found that the 9·2-inch fired at Shoeburyness with an elevation of 40° and a muzzle velocity 2375 f/s, sent a shot weighing 380 lb. to a range of over 20,000 yards, and that the drift was about 1000 yards to the right of the vertical plane of fire.

But the general effect may be attributed to the observed tendency of the projectile to move with its axis nearly tangential to the trajectory.

To keep the point of the projectile continually turning downwards

Digitized by Google

into the tangent of the trajectory, the projectile must be acted upon, as in the case of a top, by a couple whose axis is directed towards the centre of curvature of the trajectory.

This couple will be called into existence if the projectile moves in a slightly sidelong position, with its nose turned a little to the right of the vertical plane of motion; and now the drift may be supposed due to the projectile following its nose to the right, and a deflection to the right of the vertical plane of fire thus accumulates in consequence.

In the case of the new 13-pr. and 18-pr. Q.F. guns, the permanent angle of deflection is given by inclining the cradle trunnions $1\frac{1}{2}°$ to the horizontal, the left trunnion being the lower.

2. Wind.

This effect of wind is usually estimated, and corrected for, when possible, by observation of fire.

3. Want of level, *i.e.*, anything which causes the plane containing the sights to be rotated out of the vertical plane, and so causes deviation between the vertical planes of sight and departure.

Thus with field, mountain, and certain siege guns, one wheel might, on account of the ground, be higher than the other: a screw gun, such as the 7-pr. of 400 lb. might be "overscrewed," so that the trunnion ring would be rotated out of its proper position; a heavy gun, with or without trunnions, might, owing to some defect in the mounting or platform, be "down on one side."

The effect of this want of level is to deflect the projectile towards the lower side: its extent can usually be ascertained and allowed for. It is mathematically investigated later on.

For given ballistic conditions, drift can usually be measured and allowed for. With the 60-pr. B.L. gun, the adjustment for difference of level of wheels is arranged for by means of cross levels on the rear sight. This will be referred to later.

From the above considerations it is apparent that if it is desired to hit a point S, the axis of the gun must be directed on some higher point P, say, in order to counteract gravity, &c., P being vertically over some point T, say, to the *left* of S, it being supposed that there are some disturbing causes whose united effect would be to deflect the projectile a distance TS to the right of the prolongation of the axis of the piece.

Fig 1.

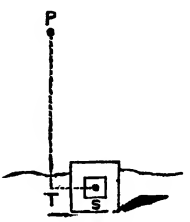

The virtual effect of travel of target is analagous to the effects that have just been discussed; as the target moves after the gun is laid, its motion between the completion of the laying and the moment the projectile reaches the end of the range must be allowed

Digitized by Google

for in the laying; the component of this motion, referred to the vertical plane, is allowed for in the elevation, the component referred to the horizontal plane is allowed for in the training.

The Direction of the Line of Sight.

A consideration of the ordinary tangent sight and foresight will demonstrate how the line of sight is practically directed, and will lead up to the consideration of other appliances.

Fig. 2.

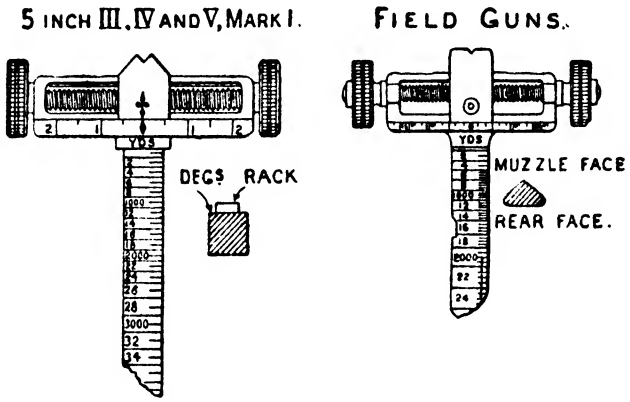

The tangent or hind sight consists of a steel bar with a cross head; the bar slides in a socket attached to the gun; it is of triangular or rectangular cross section, and is graduated usually on the rear face in yards and on the front in degrees. The cross head is provided with a sliding deflection leaf, in which is a central notch; the leaf can be moved along a scale right and left of a central zero. The foresight is usually hog-backed or acorn-shaped; as seen from the rear it has practically a triangular cross section.

When the gun is properly laid, the line of sight passes through a point midway between the shoulders of the notch, the apex of the foresight, and the point aimed at.

When the steel bar is run down in the socket to its lowest position it is at zero. If the gun were laid with the tangent sight in this position, the line of sight would be parallel to the axis of the bore, and the gun would be laid "point blank."

When the gun is to be laid on an object at any range, the elevation due to the range must be given; this is effected by raising the tangent scale until the required graduation is level with the top of the socket; then, when the breech is lowered, so that the line of sight may be directed on the object, the angle between the axis of the gun and the line of sight will be the angle due to the range, *i.e.*, the angle of tangent elevation (*vide* fig. 2, Chapter I).

The graduations on the bar which register the elevation given, must first be calculated in degrees; they are determined from the relation

$$l = r \tan \theta,$$

Digitized by Google

where l is the length in inches from the zero of the scale to the required graduation; r the radius distance in inches and θ the angle of elevation represented by the graduation in question; when the degree graduations are obtained, graduations in yards can be obtained from them by noting the ranges and their corresponding elevations in the range table of the gun.

The socket for the bar of the tangent sight is made so as to give the latter a set to the left; this is done to counteract drift, as will be explained later.

Mathematical Investigation.

The foregoing points with regard to drift and deflection may be considered mathematically as follows :—

Fig. 3.

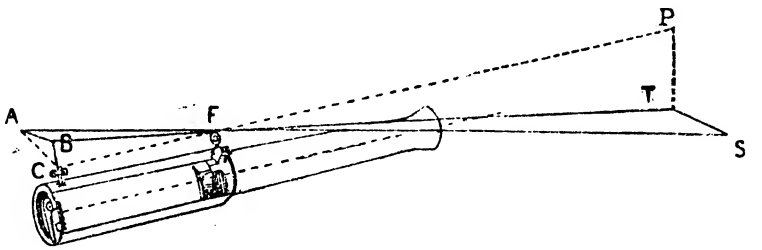

Let BC in fig. 3 represent a tangent scale raised to the tangent elevation CB required for the distance FT, which may be called the range R; so that, if the plane FBC is vertical, with BF aligned on T, the shot would strike at T in the absence of drift or other lateral disturbance.

But if the shot strikes the vertical tangent through T to one side at S, the horizontal distance TS is called the *drift*, and denoted by D, and the angle TFS is called the *drift-angle*, and denoted by γ suppose.

To align the sights on S, the point struck, deflection BA must be given on a deflection scale, such that

$$\frac{AB}{BF} = \frac{TS}{FT} = \frac{D}{R} = \tan \gamma.$$

Through the fore-sight F draw FC parallel to the axis of the piece; then BFC is the angle of tangent elevation, denoted by E suppose.

If the angle ACB is denoted by θ,

$$\tan \theta = \frac{AB}{BC} = \frac{AB}{BF} \cdot \frac{BF}{BC} = \tan \gamma \frac{1}{\sin E}.$$

But R sin E is practically the same as R tan E or TP in fig. 1 or 3, and TP is practically $\frac{1}{2}gT^2$, the vertical distance fallen by the shot from its original direction of projection FP, in the time of flight T; and as the drift D is found in practice to vary very nearly as the square of the time of flight, the angle θ is very nearly the same for all ranges; it is a small angle, never exceeding 3°.

Digitized by Google

Advantage is taken of this circumstance by inclining the slot for the tangent scale laterally in the direction of AC at an average angle θ to the line BC, called the *permanent angle of deflection.*

With howitzers, however, the varying charges prevent the use of a permanent angle of deflection; their tangent scales are therefore perpendicular to the plane through the axis of the piece and the trunnion, and are provided with long deflection bars.

Let PB be the tangent or back sight of a gun whose axletree is level (see fig. 4A), let the angle of elevation be E and the gun laid on to a target T, if now from inequalities or slope of the surface of the ground, or platform, the axis of the trunnions, or the axletree, slopes at an angle β, then if we draw PN perpendicular to NB, which is now drawn vertically downwards through B, the angle PBN is β (see fig. 4B), and the amount of deflection that has been put on to the tangent sight is PN. It is now required to find what number of minutes of deflection this represents, that is, what angle does PN subtend at the foresight.

Fig. 4A.

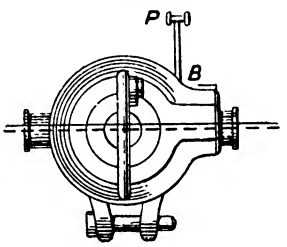

AXIS OF TRUNNIONS HORIZONTAL.

Fig. 4B.

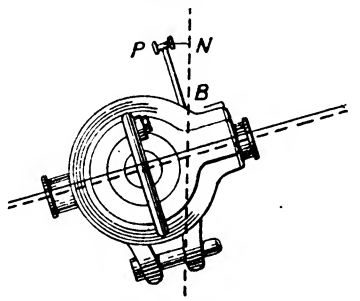

AXIS OF TRUNNIONS NOT HORIZONTAL.

Fig. 4C.

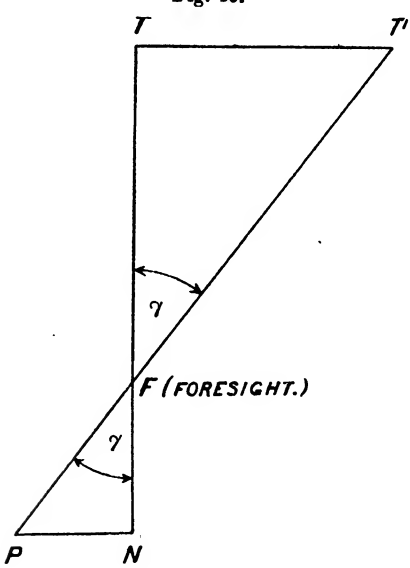

Digitized by Google

From fig. 4B we see that

$$PN = PB \sin \beta$$

$$= h \sin \beta,$$

where h is the length of sight.

In fig. 4C, let F be the foresight and N, P have the same meaning as in fig. 4B, T is the target, then since the angle of elevation is E, we have

$$\frac{\text{length of sight}}{\text{length between back and foresight}} = \tan E \text{ (see p. 75)},$$

i.e.,

$$\frac{h}{l} = \tan E.$$

If γ is the deflection in minutes, then, producing PF to T', then

$$\tan \gamma = \frac{PN}{NF} = \frac{h \sin \beta}{l} = \frac{h \sin \beta}{h \cot E} = \sin \beta \tan E,$$

when E, β, and γ are small, E and β measured in degrees, γ in minutes. Then taking $\pi = 3$, we have

$$\tan \gamma' = \tan \left(\frac{\gamma}{60}\right)^\circ = \frac{\gamma}{60} \cdot \frac{\pi}{180} = \frac{\gamma}{60 \times 60}$$

$$\sin \beta^\circ = \beta \cdot \frac{\pi}{180} = \frac{\beta}{60}$$

$$\tan E^\circ = E \cdot \frac{\pi}{180} = \frac{E}{60}$$

$$\therefore \text{ since } \tan \gamma = \sin \beta \tan E,$$

so

$$\frac{\gamma}{60 \times 60} = \frac{\beta}{60} \times \frac{E}{60},$$

so that, for practical purposes,

$$\gamma' = \beta^\circ \times E^\circ,$$

which establishes the rule that—

> "The product of the slope (β°) of the trunnions in degrees and the elevation (E°), also in degrees, gives the minutes of deflection (γ') to be given to the higher side."

A knot is a speed of one nautical mile (1000 fathoms) per hour, so that with a fathom of 6 feet a knot is 100 feet per minute, or

$$1 \text{ knot} = \tfrac{5}{3} \text{ f/s}.$$

Deflection for speed K (knots) of platform (ship) or target can be found thus:—

Let T be the target, F the foresight of the gun, and B the tangent or back sight.

Digitized by Google

1st. Suppose the target fixed and that the gun moves as when firing on board a ship whose speed is K knots across the front of the target.

K knots is $\frac{5K}{3}$ f/s.

Fig. 5.

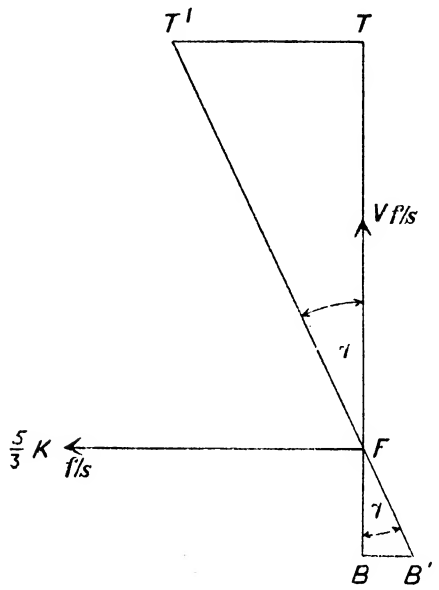

Let the direction in which the ship is moving be as shown, and let V be the muzzle velocity of the shot, then the shot will strike at T', where

$$\tan \gamma = \frac{TT'}{TF} = \frac{\frac{5}{3}K}{V},$$

because the shot moves in the direction FT' on leaving the muzzle of the gun, according to the law of the parallelogram of velocities, *i.e.*, since

$$\angle B'FB = \angle TFT',$$

we have

$$\tan BFB' = \tan \gamma = \frac{BB'}{BF} = \frac{d}{r},$$

$$\therefore \frac{d}{r} = \frac{\frac{5}{3}K}{V},$$

where d is the deflection in inches and r is the distance in inches between the two sights, V is the muzzle velocity.

2nd. *Suppose the target moving and the gun fixed.*

If the target (ship) moves with a speed of K knots directly across the front of the gun, then, if the range FT = R yards, and no deflection be given, the shot will strike at T, whilst the target will have moved to T'.

Digitized by Google

If the shot takes t seconds to go from gun to target for a range of R yards, then the average velocity of the shot is

Fig. 6.

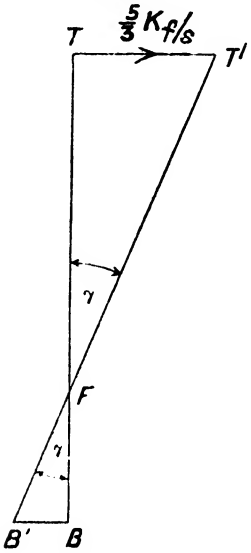

$$\text{U f/s} = \frac{3\text{R}}{t}, \quad i.e., \quad 3\text{R} = \text{U}t.$$

The ship travelling at a speed of $\frac{5}{3}$K f/s for t seconds will pass over

$$\text{TT}' = \tfrac{5}{3}\text{K} \,.\, t \text{ feet},$$

and

$$\tan\gamma = \frac{\text{TT}'}{\text{TF}} = \frac{\frac{5}{3}\text{K} \,.\, t}{3\text{R}} = \frac{\frac{5}{3}\text{K}}{\text{U}},$$

and therefore

$$\frac{\text{BB}'}{\text{BF}} = \frac{d}{r} = \tan\gamma = \frac{\frac{5}{3}\text{K}}{\text{U}},$$

where U is the average velocity over the range.

Thus, if r is 3 feet = 36 inches, and V = 2000 f/s, U = 1500 f/s, the length of a graduation d for 10 knots speed is given by

$$d = \frac{36 \times \frac{5}{3} \times 10}{2000 \text{ or } 1500} = 0{\cdot}3 \text{ or } 0{\cdot}4 \text{ inch}.$$

The deflection leaf is made use of to compensate for causes tending to divert the projectile to the left or right, it being a practical rule "never to lay off the target." The scale on the cross head is usually graduated in divisions, each division representing five minutes, on the same scale as the degrees on the tangent bar, and by its aid the notch on the leaf can be set to any required graduation; so that when the gun is laid, its axis will make an angle with the line it would have occupied had the notch remained at zero. Thus, suppose the notch were removed ten minutes to the left, then when the gun is laid its axis will make an angle of ten minutes with the position it would have occupied had the gun been laid with the notch at zero.

Digitized by Google

Methods of Sighting used in Practice.

The methods of sighting used in the Service may be classed as follows:—

A. By direct vision (tangent elevation);
B. By mechanical indicators or clinometer (quadrant elevation);
C. By automatic sights (tangent elevation and quadrant elevation);
D. By P.F. system.

or by a combination of these methods.

A. We use either a tangent sight or a telescope provided with a pointer.

Tangent sights form the oldest system, the line of sight being the prolongation of the line joining two sights, of which the foresight is usually fixed, and of an acorn or other suitable shape, while the back sight is adjustable both vertically and horizontally and carries a notch. The sighting point of this latter is halfway between the top edges of the notch; this point, the top of the fore sight, and the target must be brought absolutely in line.

Such an alignment is called a full sight, see figure.

Fig. 7.

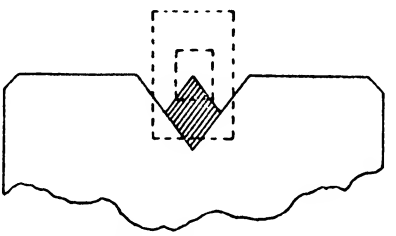

FULL SIGHT.

If the bottom of the notch be employed (termed a fine sight), an error is introduced and the gun is given too little elevation, the extent of the error being the angle subtended by the depth of the notch at the distance between the two sights.

To estimate the extent of this error, consider the notch to be 0·1 inch deep and the distance between the sights 30 inches, then the angular error will be

$$\tan^{-1}\frac{1}{300} = \tan^{-1} 0{\cdot}00333 = 12'.$$

When the gun is carried in a cradle, as in Q.F. carriages, a more convenient method of mounting the sights is to place them at either end of a sight bar adjustable laterally, relative to an arm or rocking bar. This rocking bar is pivoted to the cradle so as to be moved in a vertical plane by a miniature elevating gear. This arrangement forms the rocking bar sight of our Service, it is also termed the "Bar and Drum" sight from the fact that the angle of elevation may be read off a drum actuated by the gear. An angular movement of the sight bar for deflection is effected by means of a screw.

Digitized by Google

HF is a bar upon which the hind sight H and the foresight F are mounted; it is pivoted at C; when a handle L is rotated the elevating arc J raises the end H of the bar, so that the latter makes

Fig. 8.

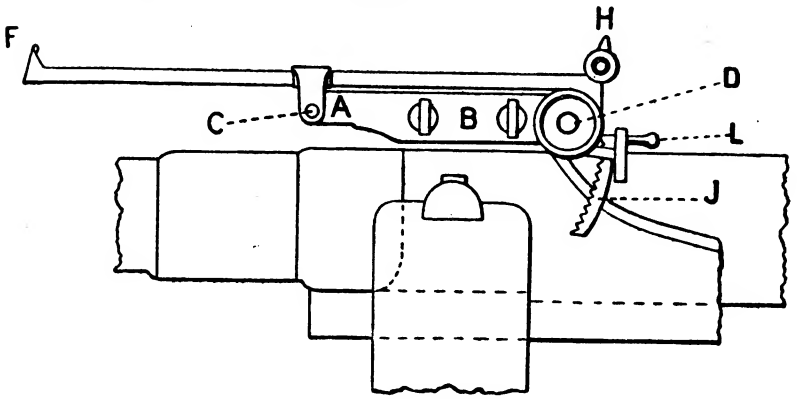

the desired angle of elevation with AB, which is attached to the mounting and is parallel to the axis of the bore. Ranges corresponding to the correct angles of elevation are engraved on the circumference of the drum D, which rotates round an axis perpendicular to that of L and is actuated by a wheel and worm.

This system lends itself to the combination of the telescopic and open sights, the telescope being mounted in carriers attached to the same bar that carries the open sights, the optical axis of the telescope thus remaining parallel to the line of the open sights and the adjustments for elevation and deflection being common to both.

By means of a pointer contained in the telescope the gun may be laid by directing its optical axis on the target alternatively with the use of the open sight.

A similar method was embodied in Scott's sights for Field Artillery, the body of the telescope itself taking the place of the rocking bar, and deflection being given by moving the pointer horizontally. The telescope in this case was pivoted for elevation to a carrier attached to trunnions resting in V-shaped notches on one trunnion, so that it can be levelled and the sighting plane brought vertical irrespective of the difference in level of the wheels.

The Independent Line of Sight.

The most recent arrangement of sights for Field Artillery is the system known as the "independent line of sight;" this is, strictly speaking, a combination of methods A and B, and may best be considered here.

Under this system the line of sight is directed on the target by direct vision irrespective of the angle of elevation required for range. The axis of the piece is set at the correct angle to the line of sight by the aid of a range indicator which reads in degrees or yards. These two adjustments are quite independent of one another, and are performed by different men and different sets of gear. Moreover, they can be performed simultaneously without interfering with each other, or either can precede the other.

(T.G.)

Digitized by Google

To embody this principle, therefore, three sets of gear are required:—

I. To move the line of sight relative to the horizontal (angle of sight).

II. To move the gun relative to the line of sight (angle of elevation).

III. To measure and record on a suitable dial the motion given by II.

These requirements can best be applied to a sight of the rocking bar type, which may be provided with both open and telescopic sights.

In the new 13 and 18-pr. Q.F. equipment, the Motions I and II are provided for by employing a double-ended elevating screw, to the middle point of which the rear end of a rocking bar sight is connected by a suitable link. The front end of the rocking bar is pivoted to a prolongation of the left cradle trunnion, the pivot being so inclined as to throw the sighting plane sufficiently out of the vertical to compensate for drift.

The lower half of the screw runs in a nut carried by the carriage, while the cradle runs up and down the upper half of the screw.

A separate indicator measures and records this latter motion.

By attaching a suitable clinometer to the rocking bar and setting it at the observed or calculated angle of sight the Motion I can be applied, though the target be invisible through atmospheric causes or from the conformation of the ground. The gun meanwhile is set at the angle of elevation for range by II, as before, the lateral alignment being obtained by aiming posts. The sights will then be actually pointing at the target, although there may be hills or fog in the way.

The great advantage of the independent line of sight is that it limits the duties of the layer to keeping his sights on the target, such alignment not being disturbed by changes in the angle of elevation, such as occur during ranging or engaging a moving target; these changes only affect II.

The advantages of the system can however be fully reaped only when the gun is allowed a sufficient length of recoil through a cradle to render the latter and the rest of the carriage motionless during recoil.

The sight and elevating gear being attached to the cradle, and not to the gun, do not recoil and allow the layer to follow up a moving target continuously, and not lose sight of one so obscure as to be difficult to pick up.

B Method.

In this system, which is chiefly applied to guns in permanent works, the gun can be set at an angle of quadrant elevation and at any degree of traverse by the aid of mechanical indicators. The latest form of elevation indicator is a graduated circular plate carried by one end of a short shaft. The other end carries a toothed wheel, actuated by a toothed arc, attached to the cradle in which the gun rests. Any motion of elevation given to the gun will cause the plate to revolve past a stationary reader and allow the corresponding graduation in yards to be read off. For varying charges different sets of concentric graduations can be engraved on the plate and the reader clamped to the set required.

The degree of traverse can be read by the graduations on a ring, in a suitable position round the pedestal in connection with a reader

Digitized by Google

fixed to the carriage. This method is usually employed in connection with the various range finding or position finding systems.

In some cases the elevation indicator only may be employed, the gun being laid for direction by direct vision, making use of straight edged sights for the purpose. Straight edged sights may be described as a tangent sight and foresight with blades attached to them as in the figures:—

Fig. 9.

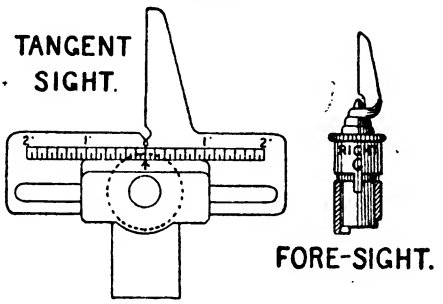

These blades serve two purposes: they are found to be of use in keeping a gun trained on a moving object, and they obviate the constant altering of the height of the hind sight consequent on change of range, as the blades cover some 1,000 yards of water.

Guns that employ the elevation indicator are always placed at a certain height above the sea. In order therefore to determine the quadrant elevation due to any range, it is necessary to subtract from the tangent elevation, as given in the range table, the angle of depression due to the range; it sometimes happens that the latter angle is greater than the former, so that the quadrant elevation is *minus*, or really *quadrant depression*. When the quadrant elevation due to each 100 yards of range is determined, it is then possible to graduate the rear edge of the elevation indicator in yards, by making the graduations thereon correspond with the degree graduations on the elevation indicator.

Example

6″ B.L. Gun, Mark VII.

Charge 23 lbs. cordite M.D. Size 16.
Muzzle velocity 2493 f/s at 60° F.
Height above Mean Sea Level 100 feet.

Range in yards.	Tangent elevation.	Angle of depression.	Quadrant angle.
2,000	1° 1′	58′	3′ elevation
4,000	2° 32′	29′	2° 3′ ,,
6,000	4° 46′	19′	4° 27′ ,,
8,000	7° 58′	14′	7° 44′ ,,
10,000	12° 6′	12′	11° 54′ ,,

As owing to the tide the sea level alters from time to time, the *height of a gun above mean tide level* is usually taken as the height

Digitized by Google

of site, and quadrant elevation calculated therefrom, and a "tide correction" applied where necessary, by adding or subtracting from the range given to the gun.

Fig. 10.

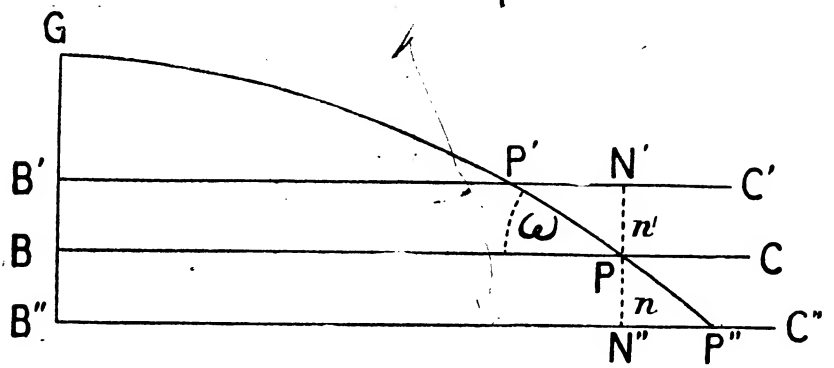

Thus let a gun be placed at G, at a height GB above *mean tide* level. Let B' C' be *high water* level and B" C" *low water* level. Then if a gun is correctly laid to strike P, with a quadrant elevation due to a height G B, if it is "high water" it will strike "short" at P', if it is "low water" it will strike at P" and be "over."

Intermediate fluctuations of the tide would have corresponding effects.

The distance P'N' or P"N" evidently depends on the rise or fall of the tide and the angle of arrival at the range in question.

Thus, suppose the level of the water to be n feet above or below mean tide, then for a range R yards and an angle of arrival ω, the *range correction due to tide* would be

$$\tfrac{1}{3}n \cot \omega \text{ (yards)}.$$

Tables of tide corrections are made out to suit local conditions, and in practice the amounts are recorded in multiples of 25 yards.

EXAMPLE.

6" B.L., Mark VII.
Muzzle velocity 2493 f/s.
Height of gun above Mean Sea Level 100 feet.
Difference in height between high water and low water 20 feet.

Correction for low tide is	.. ..	$-\frac{10}{3}\cot\omega$ yards
,, ,, $\frac{1}{4}$ tide is	.. ..	$-\frac{5}{3}\cot\omega$ yards
,, ,, mean tide is	.. ..	nil yards
,, ,, $\frac{3}{4}$ tide is..	.. ..	$+\frac{5}{3}\cot\omega$ yards
,, ,, full tide is	.. ..	$+\frac{10}{3}\cot\omega$ yards,

where ω is the angle of arrival (see page 4) for the range considered.

The angle of descent for any range is got at once from the Range Table of the gun, and the necessary corrections for height of tide are shown in tabular form.

Digitized by Google

Range in yards.	Angle of descent.	Angle of sight.	Angle of arrival.	Correction in yards.				
				Low tide.	Quarter tide.	Mean tide level.	Three-quarter tide.	Full tide.
	° ′	′	° ′					
2,000	1 18	58	2 16	−84·2	−42·1	0	+42·1	+84·2
4,000	3 40	29	4 9	−46·0	−23·0	0	+23·0	+46·0
6,000	8 2	19	8 21	−22·8	−11·4	0	+11·4	+22·8
8,000	14 24	14	14 38	−12·8	− 6·4	0	+ 6·4	+12·8
10,000	22 22	12	22 34	− 8·0	− 4·0	0	+ 4·0	+ 8·0

A clinometer placed on a plane cut on the gun or cradle may be employed in the case of wheeled artillery to lay for elevation when the target is invisible, and its function then becomes similar to that of an elevation indicator.

When, however the target is above the gun, the angle of sight must be added to the angle of tangent elevation, and when the target is below, the angle of sight must be subtracted from the tangent elevation to give the correct quadrant angle of elevation.

This does not apply to the sight clinometer of the independent line of sight, insomuch as this addition or subtraction is performed by setting the sight clinometer to the angle of sight and the range indicator to the angle of elevation.

Method C.

All automatic sights are based on the same principle, namely: that for a given range there is a corresponding T.E. and Q.E., when the ballistic conditions and the height of site are constant.

The following is an example of how this principle may be applied:—FH in fig. 11 is a bar sight, similar to that of fig. 6, which carries an arm CD. C is a pivot carried by AB, a straight piece of metal which always remains parallel to the axis of the bore; the bar carrying the fore and hind sights, F and H, with its attached arm CD, is capable of movement about C, but this movement is governed by the pin D, which moves in the cam ER. The front surface of ER is cut so that when the line of sight HF is directed on an object, the angle between HF and AB will be the T.E. due to the range. This would be the case when the reading of a clinometer placed on FH (which would give the angle of sight or angle of depression), added to the reading of a clinometer placed on AB (which would give the Q.E.), were together equal to the range table angle of T.E., due to the range of the point upon which HF is directed.

From the above description it is seen that the line of sight and the axis of the piece have relative motion; one cannot be altered without interfering with the other.

Corrections for varying heights of tide are made as follows:—The plate in which the cam ER is cut is pivoted at X, and can be slightly rocked by the action of the handle SY, which can be clamped at any position along the arc VV′, which carries graduations in accordance with local conditions.

Digitized by Google

Failure to use the tidal adjustment as the tide rises will cause the shooting to be over, and *vice versâ* on the water level.

Fig. 11.

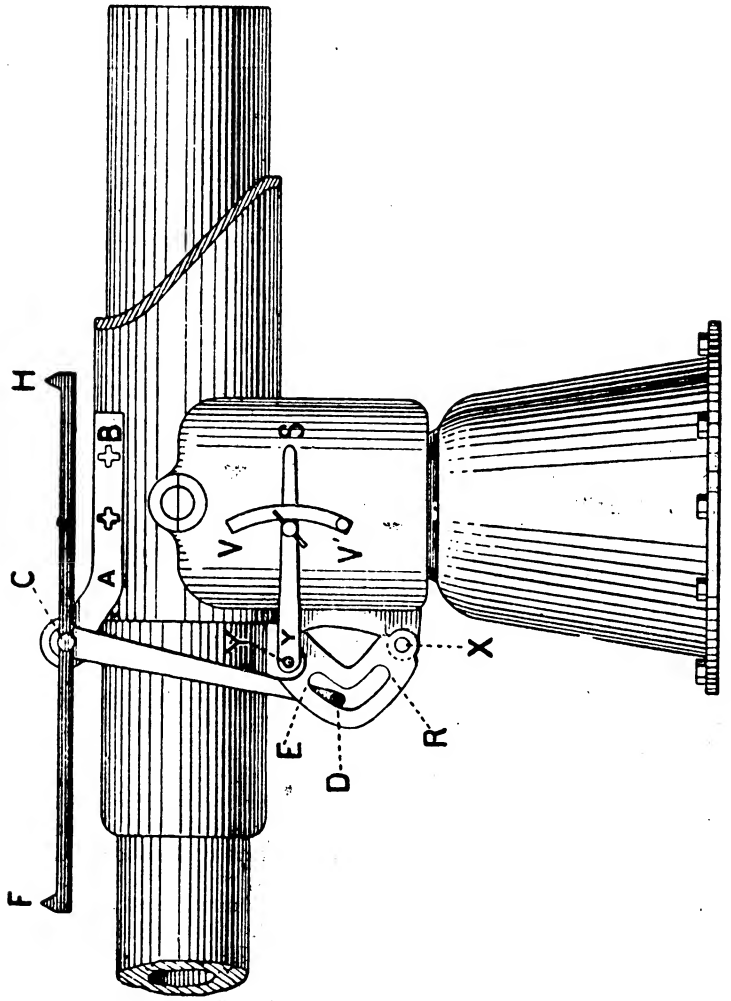

Assuming that the tide is rising but no tidal adjustment is made let G be the gun at a height GA above mean sea level ABC: B is

Fig.

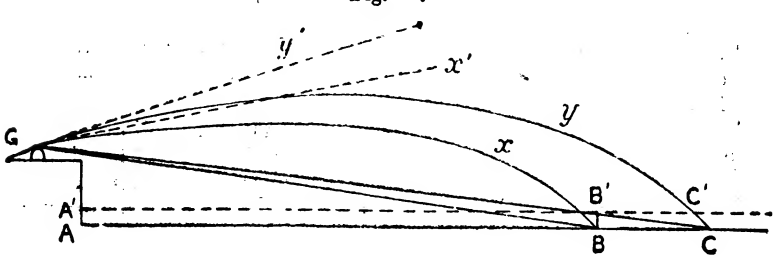

Digitized by Google

the water line of the target. As the tide rises to A'B'C', the line of the sight bar alters from GB to GB'C, and the trajectory from GxB to GyC'C, and B'C' represents the error "over" due to failure to use the tidal adjustment, and whilst the sight bar turns only through the angle BGB', the gun changes in elevation through the angle $x'Gy'$, which is a much greater angle than BGB', and therefore the trajectory cannot pass through B'.

The error

$$B'C' = \frac{\Delta h \operatorname{cosec} \alpha \sin \theta}{\sin (\theta + \alpha)}$$

where

Δh is the difference in yards between the height h yards set on the tide lever and the true height.
θ is the angle of descent for the range.
α is the angle of depression.

Fig. 12.

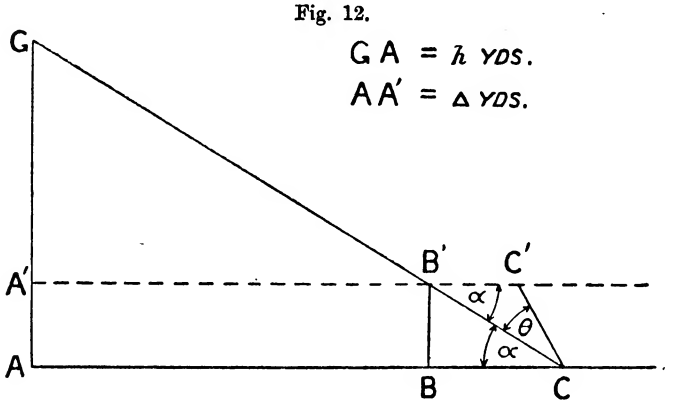

We have from fig. 12 reproduced, but with heights and angles exaggerated and without lines, x, y, x' y' from fig. 11.

$$B'C' = CC' \frac{\sin \theta}{\sin \alpha}.$$

But

$$CC' = \frac{BB'}{\sin C'CB} = \frac{\Delta h}{\sin (\theta + \alpha)},$$

$$\therefore B'C' = \Delta h \frac{\sin \theta}{\sin \alpha \sin (\theta + \alpha)} = \Delta h \frac{\operatorname{cosec} \alpha \sin \theta}{\sin (\theta + \alpha)}.$$

But we have also

$$\operatorname{cosec} \alpha = \frac{B'C}{BB'} = \frac{GC}{GA} = \frac{R}{h},$$

where R is the range in yards.

$$\therefore \text{error} = \frac{\Delta h}{h} . R . \frac{\sin \theta}{\sin (\theta + \alpha)},$$

and the fraction

$$\frac{\sin \theta}{\sin (\theta + \alpha)}$$

increases as θ increases, that is, increases with the range.

Digitized by Google

From the equation

$$\text{error} = \frac{\Delta h}{h} \cdot \text{R} \cdot \frac{\sin \theta}{\sin (\theta + \alpha)}$$

we see that

error increases as the tide rises;
" " " range increases;
" decreases " height of side h increases.

Moreover, the lower the velocity of the gun the greater are the angles of descent θ, hence the error is also increased with a gun having a low muzzle velocity.

Method D.

As this method may practically be considered as entirely instrumental, it need not be further discussed here; full descriptions will be found in the Manual of Position Finding.

Digitized by Google

Theory of Range Finding.

The range R of a distant object C to the front of a measured base A B of length c is taken as

$$c \text{ cosec } C;$$

when the angle of convergence C of the lines of sight AC and BC, in other words the *parallax* of C, has been measured:

$$c \text{ cosec } C$$

is the diameter of the circle round ABC: the letters and notation employed in Trigonometry are employed here for the moment.

Fig. 13.

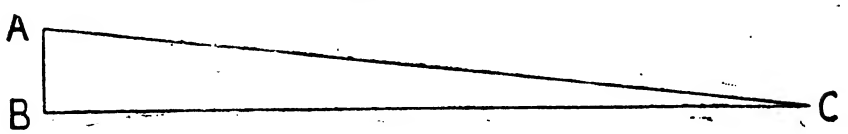

If the angle C is small, as in practice, and is expressed in degrees or minutes, we can put

$$\sin C = \frac{C^\circ}{57{\cdot}3}, \text{ or } \frac{C'}{3438},$$

and then

$$R = 57{\cdot}3\,\frac{c}{C^\circ}, \text{ or } 3438\,\frac{c}{C'},$$

giving the range R in yards, if c is measured in yards; but if c is measured in feet,

$$R = 1146\,\frac{c}{C'};$$

this is the formula of p. 5 used with the D.R.F., in which case the base AB is vertical, and ABC is a right angle, and AC is the range R.

But with field range finders, such as the mekometer, or the Barr and Stroud range finder, the base AB is horizontal.

Range finders differ from position finders in that they can only measure the distance from the point they occupy to the object. Many range finders are movable and can be used in close proximity to the guns, but a depression range finder must be in a chosen position, and sometimes is at a considerable distance from the guns it serves, consequently ranges as measured by it will not be true for the guns, until a correction called a "group difference" is applied.

The group difference depends on "displacement" and the angle at which the guns are trained.

The guns of a fort are formed into groups, consisting of one or more guns: in the latter case a gun is selected to be the pivot gun. "Displacement" is the distance in yards between the pivot of the D.R.F. and the pivot of the group it serves. Sometimes two or more groups are served by the same instrument: the displacement must be measured in each instance.

Digitized by Google

A consideration of fig. 14 will make apparent the effect of the training on group difference.

Fig. 14.

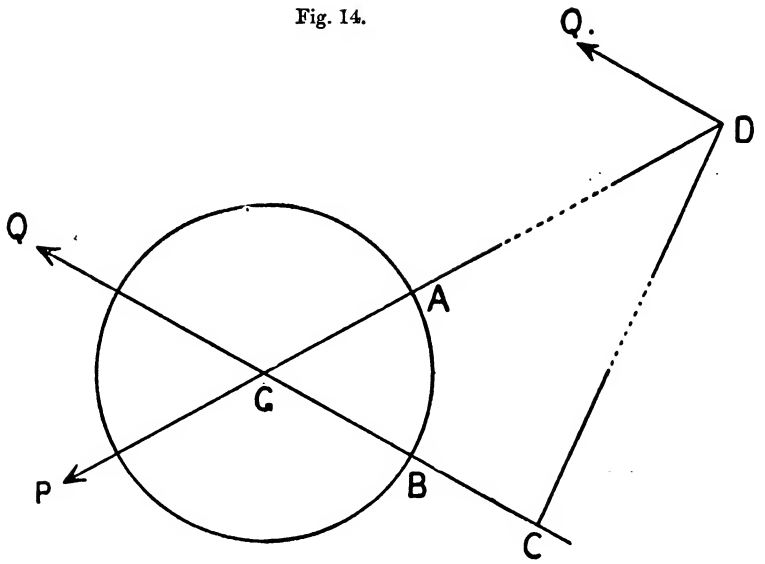

Let G be the pivot gun and AB the circular training arc; let D be the position of the D.R.F. Then GD will be the displacement. Draw the line DAGP; then if the gun and range finder be directed on the line DP, it is evident that the range measured by the instrument will exceed the range from the gun by a distance GD, *i.e.*, the displacement.

Now let the gun be trained through 60° say, so that the pointer on the mounting moves from A to B. Draw the line QGBC, and let DC be a perpendicular on this line from D.

As the ranges measured are great compared with the displacement, the lines of sight GQ and DQ, from gun and instrument respectively, may be assumed to be parallel, and the group difference is given by GC, when

$$GC = GD \cos AGB,$$

so that in this instance it is half the displacement.

In practice group differences are always tabulated in multiples of 50 yards (see G.A. Training, 1905, Vol. II, p. 127).

Digitized by Google

SECTION II.—ACCURACY OF FIRE.

For good shooting there are two essential requirements: first, a good weapon and good ammunition; and, secondly, men who know how to use them.

But after all care has been taken, absolute certainty of hitting the same spot at each round is impossible, as several causes of error exist, which cannot be avoided.

Accuracy of fire is thus a comparative term; it is said to be good when a group of projectiles fall close together.

Causes of Inaccuracy.

The **chief causes of unavoidable inaccuracy**, which may exist on the experimental practice ground, where all the conditions are most favourable, are as follows:—

1. Want of accuracy in the gun, faulty ammunition, or unsuitable mounting.
2. Weather.

Range and Accuracy.

With the object of compiling Range Tables, a gun of each nature, when introduced into the Service, is sent to Shoeburyness, and series of rounds are fired at several different elevations for **range and accuracy**, with its service ammunition.

Five or more rounds are fired at each elevation.

Mean ranges and mean lateral deviation from the line of fire are then obtained for each elevation; the difference of each round from the *mean* gives the *error*, from which the 50 % zones are worked out.

To take a practical example:—

EXAMPLE I.

No. of round.	Range.	Differences from mean, or errors.	Deviation right.	Differences from mean or errors.	Elevation.
	yds.	yds.	yds.	yds.	
1	4968	23	24·4	3·0	5° 26′
2	4954	9	21·6	0·2	..
3	4962	17	22·8	1·4	..
4	4908	37	20·0	1·4	..
5	4934	11	18·4	3·0	..
Total ..	24726	97	107·2	9·0	
Mean ..	4945	19·4	21·4	1·8	

The second column in the above table gives the actual ranges. The mean range is obtained by adding all together and dividing by 5, since 5 rounds were fired.

Digitized by Google

The third column contains the *difference* of each round, irrespective of sign, from the mean range just found. The mean of these differences is then obtained, and called the mean error in range or mean longitudinal error.

The fourth column gives the lateral deviation from the line of fire. The mean deviation is at the bottom of this column.

And the fifth column gives the differences from this mean, with a mean at the bottom called the mean error in deviation or mean lateral error.

Collecting the results from the Table A we have—

Mean range	**4945 yards.**
Mean longitudinal error	**19·4 „**
Mean deviation right	**21·4 „**
Mean lateral error	**1·8 „**

When the position of the point of mean impact on the horizontal plane is known, fig. 15 shows how the magnitude of the angle of descent determines the position of the point of mean impact on a vertical target.

Thus if β be the angle of descent, and if the horizontal target is struck at a distance l from the vertical one, the latter will be struck at a height which equals $l \tan \beta$.

Fig. 15.

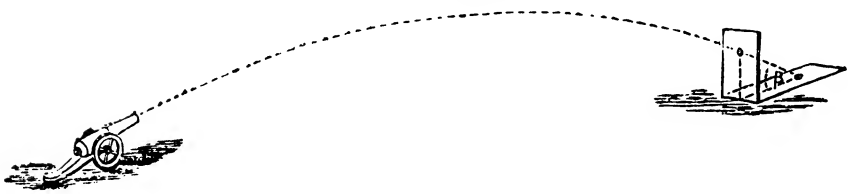

The angle of descent of the 8-inch projectile at 4945 yards is known to be 7° 25′.

$$\therefore \text{Mean vertical error} \ldots\ldots = 19{\cdot}4 \tan 7^\circ 25' = 2{\cdot}5 \text{ yards.}$$

Vertical targets are employed at the shorter ranges, because they may then be of moderate size, and errors due to inequalities of the ground are eliminated, but at long ranges targets cannot generally be made large enough to catch all the rounds.

The **point of mean impact** on a horizontal target is the intersection of the lines of mean longitudinal and mean lateral deviation, and on a vertical target it is the intersection of the lines of mean vertical and lateral deviation.

The **mean trajectory** is that which strikes the point of mean impact: it is the central one of all the trajectories fired at the same elevation.

Fig. 16.

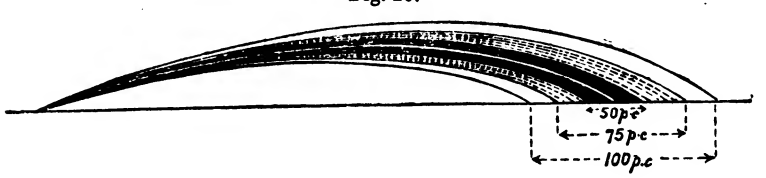

Digitized by Google

In fig. 16 the central white line represents the mean trajectory, the dark band is that in which 50 °/₀ of the trajectories lie; the shaded band is that which contains 75 °/₀, while the outer band contains the remainder. The width of these bands is exaggerated in fig. 16, for the sake of showing them clearly.

A practical illustration of dispersion or want of accuracy is given by a fire-hose, in which the stream of water is more separated at the end than at the beginning of its course through the air: the whole trajectory being a kind of bent cone, with its apex at the nozzle.

The Range Table 50°/₀ *Zones.*

The mean longitudinal error × 1·69 is taken as the width of the 50 °/₀ **length zone**; the mean lateral error × 1·69 is taken as the width of the 50 °/₀ **breadth zone**; the mean vertical error × 1·69 is taken as the width of the 50 °/₀ **height zone.**

The factor 1·69 depends on the Theory of Probability explained in Part II.

Thus, if GO, figs. 17 and 18, represents the direction of the gun, and AB is a straight line parallel to it, at a distance equal to the mean

Fig. 17.

Showing 50 °/₀ breadth zone.

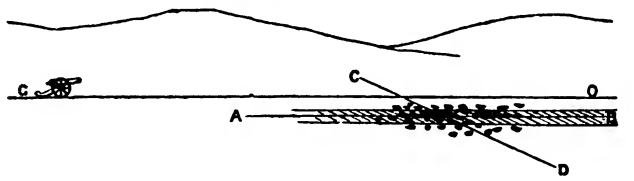

lateral deviation, and CD be a straight line at right angles to GO or AB, at a distance from the muzzle equal to the mean range; then if the zone in fig. 17, called the breadth zone, and that in fig. 18

Fig. 18.

Showing 50 °/₀ length zone.

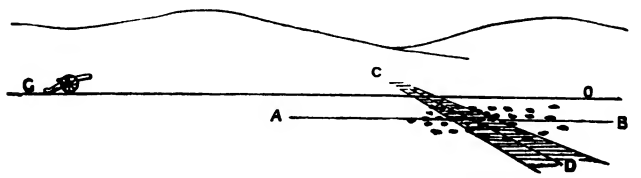

called the length zone, each contains 50 °/₀ of the hits on the surface of the ground, their widths must be 1·69 times the mean lateral error, and 1·69 times the mean longitudinal error respectively. AB and CD are the central lines of these zones.

Digitized by Google

Fig. 19.

Showing 50 °/₀ length zone and 50 °/₀ breadth zone intersecting and forming 25 °/₀ rectangle.

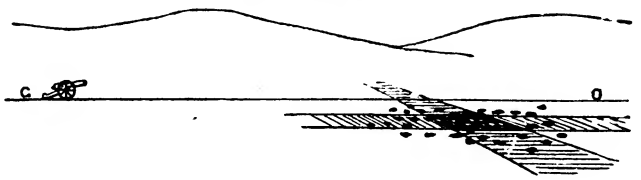

If now we look at fig. 19, where these zones are superposed, we see a rectangle which must contain 50 °/₀ of 50 °/₀, or 25 °/₀ of the total number of hits. In a similar manner a 25 °/₀ rectangle on a vertical target is made up of the intersection of the 50 °/₀ breadth and height zones.

At each range there is a horizontal and a vertical 25 °/₀ rectangle; the width of each is the same, as each has the same breadth zone, but the relation of the length of one to the height of the other depends on the angle of descent.

TABLE A.

PROBABILITY FACTORS.

Per cent.	Factor.	Per cent.	Factor.	Per cent.	Factor.	Per cent.	Factor.	Per cent.	Factor.
1	0·02	21	0·40	41	0·80	61	1·27	81	1·94
2	0·04	22	0·41	42	0·82	62	1·30	82	1·98
3	0·06	23	0·43	43	0·84	63	1·33	83	2·03
4	0·07	24	0·45	44	0·86	64	1·36	84	2·08
5	0·09	25	0·47	45	0·89	65	1·39	85	2·13
6	0·11	26	0·49	46	0 91	66	1·42	86	2·18
7	0·13	27	0·51	47	0·93	67	1·45	87	2·24
8	0·15	28	0·53	48	0·95	68	1·48	88	2·30
9	0·17	29	0·55	49	0·98	69	1·51	89	2·37
10	0·18	30	0·57	50	1·00	70	1·54	90	2·44
11	0·20	31	0·59	51	1·02	71	1·57	91	2·52
12	0·22	32	0·61	52	1·04	72	1·60	92	2·60
13	0·24	33	0·63	53	1·07	73	1·64	93	2·69
14	0·26	34	0·65	54	1·09	74	1·67	94	2·78
15	0·28	35	0·67	55	1·12	75	1·71	95	2·91
16	0·30	36	0·70	56	1·14	76	1·74	96	3·04
17	0·32	37	0·72	57	1·17	77	1·78	97	3·22
18	0·34	38	0·74	58	1·19	78	1·82	98	3·45
19	0·36	39	0·76	59	1·22	79	1·86	99	3·82
20	0·38	40	0·78	60	1·25	80	1·90	100	

This Table A is calculated on the Theory of Probability explained in Part II.

Taking the width of a 50 °/₀ zone as unity, the factor in the above table is the width of the zone containing the corresponding percentage: thus the 80 °/₀ and 20 °/₀ zone is respectively 1·90 and 0·38 times the width of the 50 °/₀ zone.

If the width of the 50 °/₀ zone is given in yards, the widths of other zones containing different percentages can be obtained by *multiplying* by their corresponding factors: thus, if the width of a 50 °/₀ zone is 3 yards, the widths of 25 °/₀ and 72 °/₀ zones are 0·47 × 3 = 1·41 yards and 1·60 × 3 = 4·80 yards, respectively.

Digitized by Google

Conversely, if it is required to find what percentages will fall in zones of given widths, the factors must be obtained by *dividing* each by the width of the 50 °/₀ zone.

Thus, with the same 50 °/₀ zone (3 yards wide) as before, what percentages will fall in zones 2 yards and 6 yards wide?

The factors are

$$\tfrac{2}{3} = 0{\cdot}67 \text{ and } \tfrac{6}{3} = 2{\cdot}00,$$

and they correspond to

$$35\ ^{\circ}/_{\circ} \text{ and } 82{\cdot}4\ ^{\circ}/_{\circ}$$

respectively.

The annexed fig. 20 represents the probability curve, the line GH being asymptotic to it; the total area contained between the curve and the line GH is proportional to the total number of rounds, or 100 °/₀.

The central area ABML represents half the total area, or 50 °/₀ of the rounds fired.

Areas of different widths contain percentages according to the table, the widths being the same as the factors in the table: thus the 75 °/₀ area, CDON, is 1·71 times as wide as the 50 °/₀ area, and the 99 °/₀ area, EFQP, is 3·82 times as wide; it is a fair approximation to assume that an area four times as wide as the 50 °/₀ area contains all the area, though there is a small portion outside.

Fig. 20.

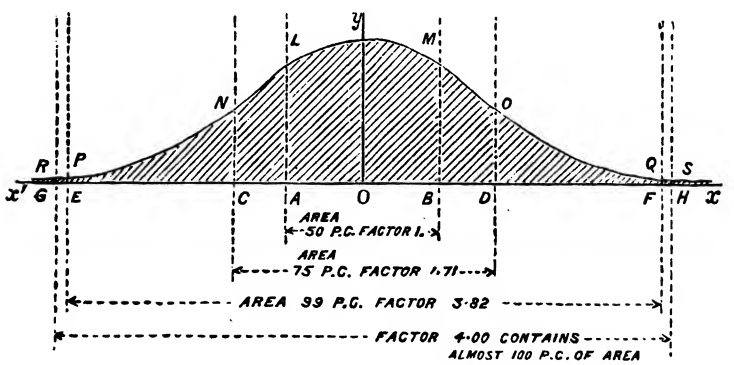

The curve of error in fig. 20 can be imitated experimentally in an instrument (fig. 21), invented by Mr. Francis Galton, and called by him the *Quincunx*, from the Latin word used to describe the arrangement in the planting of trees, which is imitated by the pins in this instrument.

A charge of small shot (or better, of spherical seeds, as not so heavy) is allowed to pour through the funnel at the top. The spherules knock against the pins and are scattered thereby in an arbitrary manner; but it is found that they group themselves in the stalls at the bottom in a manner which imitates closely the profile of the Probability Curve.

Digitized by Google

Fig. 21.

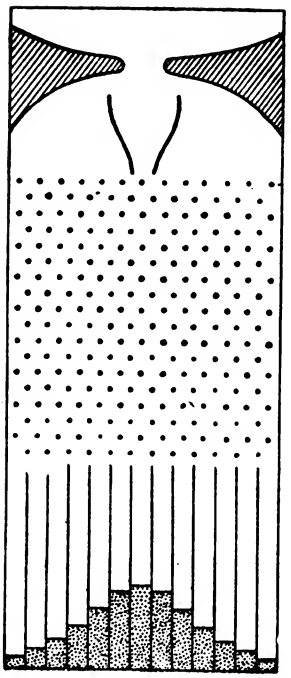

Examples on the use of Table A.

Example 1.

If a zone of a certain width catches 20 °/₀ of the rounds fired, how much wider must another be to catch 80 °/₀?

From the Table we find that the 20°/₀ zone is 0·38 of the width of the 50 °/₀ zone; and also that the 80 °/₀ zone is 1·9 times the width of the same standard.

Consequently the widths of the zones in question must be to each other as

0·38 : 1·9, or as 1 : 5,

or the 80 °/₀ zone is five times as wide as the 20 °/₀ zone

Example 2.

If the breadth and height 50 °/₀ zones are each 2 yards wide, what percentage of hits may be expected on a target 6 feet square, if the point of mean impact is in the middle of the lower edge?

The 50 °/₀ breadth zone just includes the target (fig. 22).

Digitized by Google

Fig. 22.

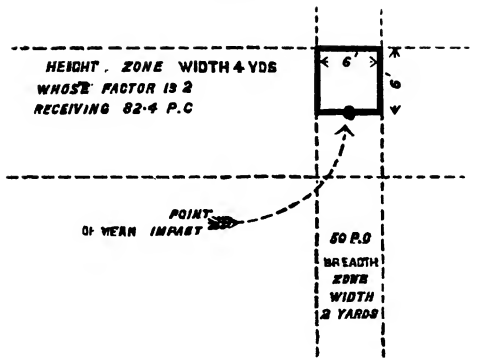

The height zone to be employed must be one which is double the height of the target, for then the point of mean impact will be in the middle of the zone, and the whole of the target will be included. The factor for this zone is evidently 2, corresponding to a percentage of 82·4: but as the target only lies on one half side, we must take half the percentage or 41·2 °/₀.

Consequently on the target we have

$$50\ ^{\circ}/_{\circ} \text{ of } 41{\cdot}2\ ^{\circ}/_{\circ} = 20{\cdot}6\ ^{\circ}/_{\circ}.$$

EXAMPLE 3.

If in the last example the point of mean impact is raised 2 feet, what improvement may be expected in the shooting?

As before, the 50 °/₀ breadth zone just includes the target (fig. 23).

Fig. 23.

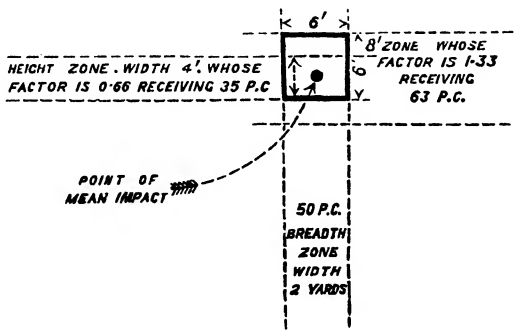

For the height zones—take one 4 feet wide and another 8 feet wide. Then the target will be contained in the lower half of the 4-feet zone and in the upper half of the 8-feet height zone.

Digitized by Google

The 4-feet zone has a factor $\frac{4}{6} = 0{\cdot}67$, and it receives

35 °/₀ hits.

The 8-feet zone has a factor $\frac{8}{6} = 1{\cdot}33$, and it receives

63 °/₀ hits.

As the height band, which just contains the target, is composed of the halves of these two zones, it must receive $\frac{1}{2} \times 35 + \frac{1}{2} \times 63 = 49$ °/₀ hits;

and the whole target has 50 °/₀ of 49 °/₀ = 24·5 °/₀

—an improvement of 3·9 °/₀ of the total fired, or 19 °/₀ more hits on the target than in the last case, for

$$\frac{3{\cdot}9}{20{\cdot}6} = \frac{19}{100} \text{ nearly.}$$

A general method will now be shown for dealing with the case when the mean point of impact is not at the centre of a given zone: the method will be found to be at once applicable to the case where there are many targets and the mean point of impact is at any point.

Fig. 24.

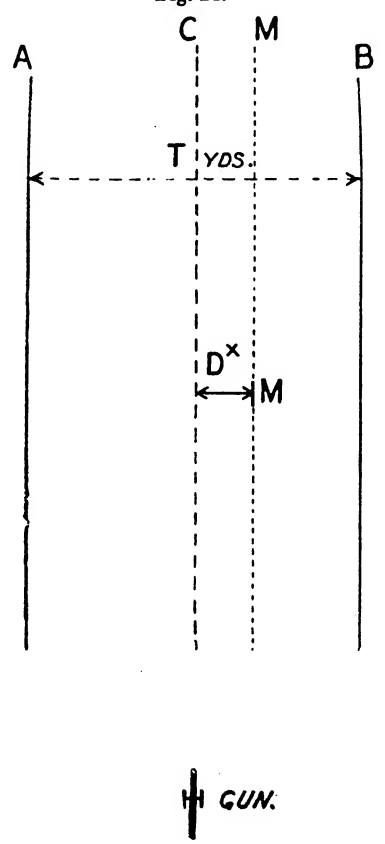

Digitized by Google

Referring to Table A, p. 94, we see at once from the table that if the 50 % width zone at a certain range is P yards, and the width of the target be T yards, then on this target we should obtain a percentage given by Table A against the fraction $\frac{T}{P}$, provided the mean point of impact be on the centre line of the width zone.

Thus if T be 15 yards and P is 20 yards,

$$\frac{T}{P} = \frac{15}{20} = 0{\cdot}75,$$

and the percentage of hits should be 38·5.

But now suppose the mean point of impact to be not on the centre line of the width zone, but to be D yards (see fig. 24) to one side of it, in this case the percentage will not be 38·5.

We will now proceed to find a method by which we can find the percentage of hits on a zone when the mean point of impact is to one side of the centre line of the zone.

Fig. 25.

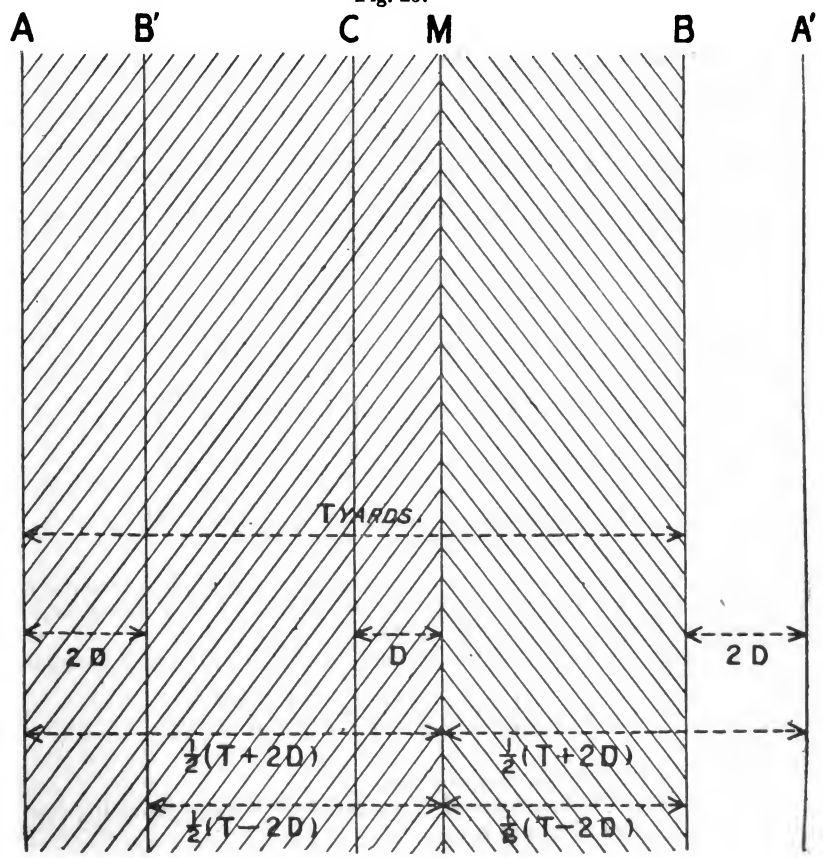

Suppose the target width AB is T yards, C is the centre line, and M the line through the mean point of impact, distant D yards from C. Take the line B′ distant 2 D yards from A, and A′ a similar distance from B (fig. 25).

Digitized by Google

The problem now is, "Find the percentage of hits to be expected on a zone T yards wide, mean point of impact D yards from the centre, given 50 % zone = P yards."

We have

$$AB = T \qquad AA' = T + 2D$$
$$AC = CB = \frac{T}{2} \qquad BB' = T - 2D$$
$$CM = D$$
$$AB' = A'B = 2D$$

so that
$$AM = MA' = \tfrac{1}{2}(T + 2D)$$
$$BM = B'M = \tfrac{1}{2}(T - 2D).$$

Therefore the zone AA' of width (T + 2D) and which has the mean point of impact M at its centre will catch a percentage of hits corresponding to the fraction

$$\frac{T + 2D}{P},$$

this percentage being got from Table A. To save repetition, it is convenient to use a symbol $f\left(\frac{T + 2D}{P}\right)$ to represent that this is the "percentage of hits corresponding to the fraction $\left(\frac{T + 2D}{P}\right)$."

Since M is at the centre of AA', the percentage of hits on AM equals the percentage on A'M,

$$\therefore \text{ percentage of hits on AM is } \tfrac{1}{2} f\left(\frac{T + 2D}{P}\right).$$

Similarly, since BM = B'M and BB' = T − 2D, so

$$\text{percentage of hits on BB' is } f\left(\frac{T - 2D}{P}\right).$$

M is at the centre of BB',

$$\therefore \text{ percentage of hits on BM is } \tfrac{1}{2} f\left(\frac{T - 2D}{P}\right).$$

Now, looking at the target zone AB, we see that the percentage of hits on it is equal to the percentage of hits on AM + percentage of hits on BM, since AB = AM + BM.

Therefore we have that the percentage of hits (q) on AB is equal to

$$q = \tfrac{1}{2}\left[f\left(\frac{T + 2D}{P}\right) + f\left(\frac{T - 2D}{P}\right)\right],$$

where

T is width of target zone,
D is displacement of mean point of impact from the centre line of target zone,
P is the 50 % zone,
f means "percentage of hits corresponding to the factor after it," and is found by Table A, page 94.

Examples are now worked out to show the use of this formula and of Table A.

Digitized by Google

It is seen, at once, that if D = 0,

$$q = \tfrac{1}{2}\left[f\left(\frac{T}{P}\right) + f\left(\frac{T}{P}\right)\right] = f\left(\frac{T}{P}\right),$$

which defines Table A.

EXAMPLE 1.

If a zone of a certain width catches 20 % of the rounds fired, how much wider must another be to catch 80 %?

From Table A, opposite 20 %, is the fraction 0·38,
" " " 80 %, " " 1·90.

These figures mean that the

20 % width zone = 0·38 × the 50 % width zone,
80 % " = 1·9 × " " "

the point of mean impact being in the middle of the zone.

$$\therefore \frac{80\ \%\ \text{zone}}{20\ \%\ \text{zone}} = \frac{1{\cdot}9}{0{\cdot}38} = \frac{5}{1},$$

∴ 80 % zone is five times as wide as the 20 % zone.

EXAMPLE 2.

If the breadth and height 50 % zones are each 2 yards wide, what percentage of hits may be expected on a target 6 feet square, if the point of mean impact is in the middle of the lower edge?

Fig. 26.

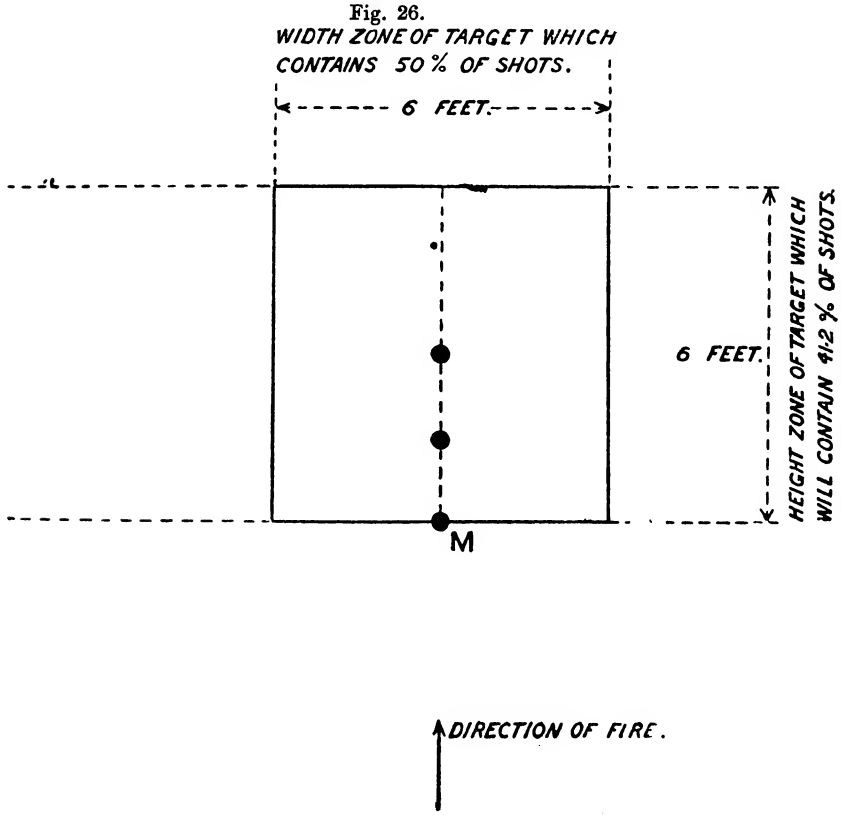

Digitized by Google

Consider first the width zone; here the mean point of impact is at the middle of the zone, hence $D = 0$; we have

$$\begin{aligned} \text{Width of target zone} &= T_1 = 6 \text{ feet}, \\ \text{Displacement} &= D_1 = 0 \quad ,, \\ 50\ \%\ \text{width zone} &= P_1 = 6 \quad ,, \end{aligned}$$

$\therefore$ the percentage of hits on the width zone is seen at once to be

$$q_1 = f\left(\frac{T_1}{P_1}\right) = f\left(\frac{6}{6}\right) = f(1) = 50\%.$$

For the height zone, the displacement of the mean point of impact from the centre is 3 feet, hence

$$\begin{aligned} \text{Width of height zone} &= T_2 = 6 \text{ feet}, \\ \text{Displacement} &= D_2 = 3 \quad ,, \\ 50\ \%\ \text{height zone} &= P_2 = 6 \quad ,, \end{aligned}$$

$\therefore$ percentage of hits on the height zone is

$$\begin{aligned} q_2 &= \tfrac{1}{2}\left(f\frac{T_2 + 2D_2}{P} + f\frac{T_2 - 2D_2}{P}\right) \\ &= \tfrac{1}{2}\left(f\frac{6+6}{6} + f\frac{6-6}{6}\right) = \tfrac{1}{2}\left[f(2) + f(0)\right], \\ &= \tfrac{1}{2} \text{ of } 82{\cdot}4, \\ &= 41{\cdot}2\ \%. \end{aligned}$$

Consequently on the target there will be a percentage of hits

$$Q = q_1 q_2,$$

so that

$$\begin{aligned} Q &= 50\ \% \text{ of } 41{\cdot}2\ \%, \\ &= 20{\cdot}6\ \%. \end{aligned}$$

Example 3.

If in the last example the mean point of impact is raised 2 feet, what improvement may be expected in the shooting?

As before, the 50 % breadth zone will catch 50 % of the shots, so that $q_1 = 50\ \%$.

For the height zone we have (see fig. of Ex. 2)

$$\begin{aligned} T_2 &= 6 \text{ feet}, \\ D_2 &= 1 \text{ foot}, \\ P &= 6 \text{ feet}. \end{aligned}$$

$$\begin{aligned} \therefore q_2 &= \tfrac{1}{2}\left[f\left(\frac{T_2 + 2D_2}{P}\right) + f\left(\frac{T_2 - 2D_2}{P}\right)\right], \\ &= \tfrac{1}{2}\left(f\frac{6+2}{6} + f\frac{6-2}{6}\right), \\ &= \tfrac{1}{2}\left(f\,1{\cdot}333 + f\,0{\cdot}666\right), \\ &= \tfrac{1}{2}\left(63\ \% + 34{\cdot}5\ \%\right), \\ &= \tfrac{1}{2} \text{ of } 97{\cdot}5 = 49\ \%. \end{aligned}$$

Digitized by Google

$\therefore$ on the target there will be

$$Q = q_1 q_2 = 50\ ^{\circ}/_{\circ} \text{ of } 49\ ^{\circ}/_{\circ} = 24{\cdot}5\ ^{\circ}/_{\circ} \text{ of hits.}$$

The improvement in shooting is therefore

$$24{\cdot}5 - 20{\cdot}6 = 3{\cdot}9\ ^{\circ}/_{\circ}$$

of the total fired, or 19 °/₀ more hits on the target than in the last case, for

$$\frac{3{\cdot}9}{20{\cdot}6} = \frac{19}{100} \text{ nearly.}$$

Example 4.

Suppose there are two targets, 6 feet wide, and of the same height, 3 feet apart, fired at by a gun at a certain range; the width of the 50 °/₀ breadth zone being 6 feet.

Which plan will give the most hits on a target—

(1.) If the mean point of impact is at the middle of one?

(2.) If it is midway between the two?

Taking the first supposition (fig. 27)—

(Neglecting height errors, which bear the same proportion throughout.)

Case (1)—

For target A.	For target B.
T = 6 feet	T = 6 feet
D = 0 ,,	D = 9 ,,
P = 6 ,,	P = 6 ,,

D = 0 show at once that 50 °/₀ of shots will fall on A since

$$\frac{T}{P} = 1.$$

$$q = \tfrac{1}{2}\left(f\frac{6+18}{6} + f\frac{6-18}{6} \right),$$

$$= \tfrac{1}{2}\left[f(4) - f(2) \right],$$

$$= \tfrac{1}{2}(100\ ^{\circ}/_{\circ} - 82{\cdot}4\ ^{\circ}/_{\circ}),$$

$$= 8{\cdot}8\ ^{\circ}/_{\circ}.$$

Therefore there will be on both A and B breadth zones

$$50 + 8{\cdot}8 = 58{\cdot}8\ ^{\circ}/_{\circ}.$$

Fig. 27.

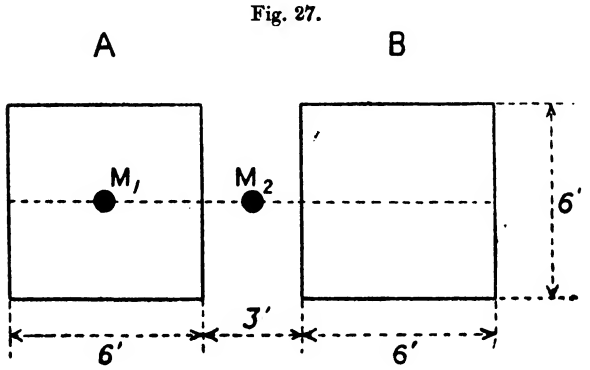

Digitized by Google

Case (2)—

The mean point of impact being exactly midway between the targets A and B, there will be the same percentage of hits on A as on B, therefore percentage of hits on A and B = twice the percentage of hits on A.

For target A.

$$T = 6 \text{ feet}$$
$$D = 4{\cdot}5 \text{ ,,}$$
$$P = 6 \text{ ,,}$$
$$\therefore q = \tfrac{1}{2}\left[f\left(\frac{6+9}{6}\right) + f\left(\frac{6-9}{6}\right)\right],$$
$$= \tfrac{1}{2}\left[f(2{\cdot}5) - f(0{\cdot}5)\right],$$
$$= \tfrac{1}{2}(90{\cdot}7\ \% - 26{\cdot}5\ \%),$$
$$= \tfrac{1}{2}(64{\cdot}2\ \%).$$

$\therefore$ percentage of hits on A and B together is

$$64{\cdot}2\ \%.$$

Therefore a greater percentage of hits will be made in Case (2).

The range tables' 50 % zones must usually be considered as guides to the probable number of hits, for, in the first place, they sometimes depend upon five rounds only, and, in the second place, the conditions of practice often differ materially from those obtaining during the trials at Shoeburyness. The best plan for determining the probable percentage of hits is to work back step by step from the number of hits actually obtained at practice. An instance of this is given.

Example 5.

Firing at a target 10 yards broad and 3 yards high, a battery made 10 % of hits and 10 % of lateral misses. What percentage of hits may be expected on a target 100 yards broad and 9 yards high, provided the practice is carried out by the same battery under the same conditions?

Fig. 28.

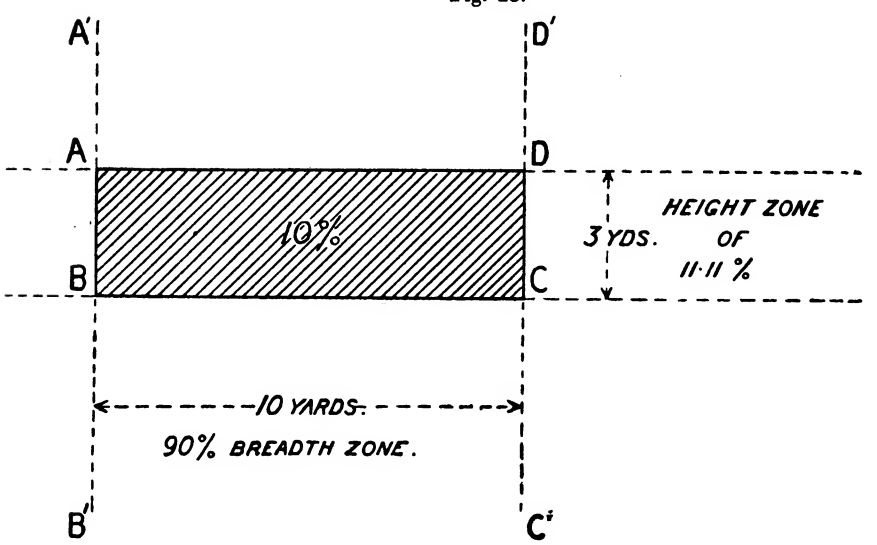

Digitized by Google

Since there are 10 °/₀ of lateral misses, therefore there must be 90 °/₀ of hits on the zone A'B'C'D', this is the breadth zone of 10 yards.

∴ the breadth of the 10 yards of target will catch 90 °/₀ of the hits.

Let

Q °/₀ hits fall on target ABCD,

q_1 °/₀ „ „ breadth zone AD,

q_2 °/₀ „ „ height zone CD,

$$\therefore Q = q_1 q_2.$$

But

$Q = 10$ °/₀ from the question,

$q_1 = 90$ °/₀.

$$\therefore q_2 = \tfrac{10}{90} \text{ of } 100 \text{ °/₀} = 11{\cdot}11 \text{ °/₀},$$

i.e., a height 3 yards is an 11·11 °/₀ zone.

Since

10 yards breadth is a 90 °/₀ zone,

$$\therefore \frac{10}{2{\cdot}44} \text{ „ „ „ } 50 \text{ °/₀ zone},$$

$$4 \times \frac{10}{2{\cdot}44} \text{ „ „ „ } 100 \text{ °/₀ zone}.$$

Since $\frac{40}{2{\cdot}44}$ is less than 100 yards, therefore a 100 yards breadth of target will certainly catch 100 °/₀ hits.

Again,

3 yards height is an 11·11 °/₀ zone,

$$\therefore \frac{3}{0{\cdot}202} \text{ „ „ „ } 50 \text{ °/₀ zone} = P.$$

The height, target being 9 yards high, = T.

$$\frac{T}{P} = \frac{9}{\left(\frac{3}{0{\cdot}202}\right)} = 0{\cdot}606,$$

which corresponds to 31·6 °/₀, *i.e.*, a target 9 yards high will catch 31·6, hence the target 100 yards wide and 9 yards high will have 100 °/₀ of 31·6 °/₀, *i.e.*, 31·6 °/₀ of hits.

EXAMPLE 6.

Firing a 6-inch B.L. Mark III at a horizontal target 60 yards long in range and of unlimited breadth, at a range of 2000 yards where the 50 °/₀ zone for range was 40 yards long, it was found that only 25 °/₀ of hits was made, instead of the full number of 68·5 °/₀. Show by trial that the point of mean impact was about 50 yards from the centre of the target.

Given M.V. = 1327 f/s.

Five minutes extra elevation makes a difference of 38 yards at 2000 yards range.

What change of elevation did the gun require ?

The shaded portion represents the target 60 yards long.

Digitized by Google

Fig. 29.

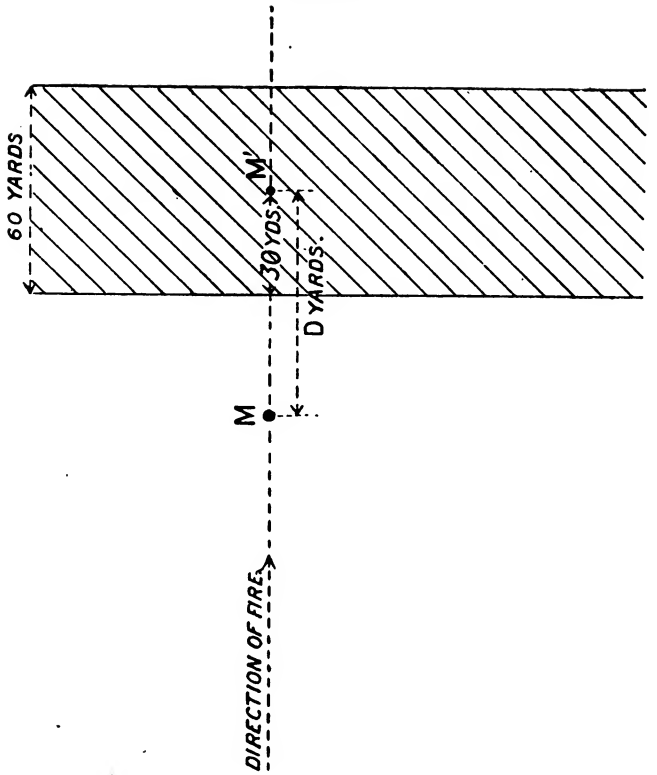

Since

P, the 50 °/₀ length zone, is 40 yards,
T „ target, is 60 yards.

and

$$\frac{T}{P} = \frac{60}{40} = 1{\cdot}5.$$

We see at once from Table A that if the mean point really were at M′, then 68·5 °/₀ of shots would have fallen on the target zone. But since only 25 °/₀ of hits were made, the mean point of impact M cannot be at M′; suppose it to be as shown, then it is required to find the displacement MM′.

Let MM′ = D yards.

Then we have for length zone

T = 60 yards,
D is unknown,
P = 40,

and therefore the percentage q of shots that will fall on the target is

$$q = \tfrac{1}{2}\left[f\left(\frac{T + 2D}{P}\right) + f\left(\frac{T - 2D}{P}\right)\right],$$

and q we know to be equal to 25 °/₀,

Digitized by Google

$$\therefore\ 50\ \%_o = f\left(\frac{T + 2D}{P}\right) + f\left(\frac{T - 2D}{P}\right)$$

$$= f\left(\frac{60 + 2D}{40}\right) + f\left(\frac{60 - 2D}{40}\right).$$

By trial we see that D is > 0 but $\not> 50$, and that when D = 50 the equation is satisfied at once, because then

$$f\left(\frac{60 + 100}{40}\right) + f\left(\frac{60 - 100}{40}\right)$$

$$= f(4) - f(1) = 100\ \%_o - 50\ \%_o = 50\ \%_o.$$

If at 2000 yards 5 minutes extra elevation gives 38 yards, then $\left(\frac{50}{38} \times 5\right)$ minutes are necessary for 50 yards, *i.e.*, about 6 minutes.

EXAMPLE 7.

Given that the 50%$_o$ zones for length of the 6-inch B.L. and of the 9-inch R.M.L. guns, at a range of 2000 yards, are 18 yards and 23 yards, determine the height of site which will put the 9-inch gun on equal terms with the 6-inch gun for accuracy of shooting at a sea-target, the 6-inch gun being at sea-level.

(The angle of descent at 2000 yards of the 9-inch gun is given in the Range Table as 3° 20′.)

Fig. 30.

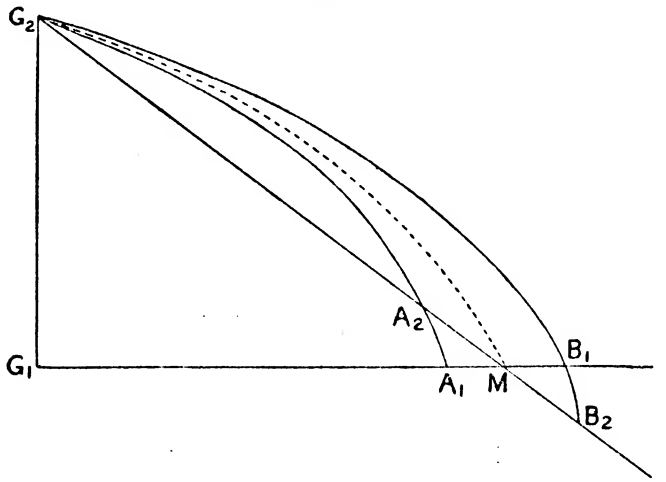

The figure is merely to help the explanation, it is not to any scale, and heights and angles are greatly exaggerated to enable these to be clearly shown.

The two guns are at G_1, G_2, and M is the mean point of impact; the height G_1G_2 or H feet is to be found.

$$A_1B_1 = 18 \text{ yards}, \quad A_2B_2 = 23 \text{ yards}.$$

The angle of descent β is $= \angle B_1B_2M = \angle MA_2A_1$, also it is clear that all the shots from G_2 (the 9-inch gun) which fall on A_2B_2 will be caught on the horizontal zone A_1B_1.

Digitized by Google

Let S be the angular depression in minutes, so that

$$S' = \angle A_2MA_1 = \angle B_2MB_1.$$

Then from the triangle A_1A_2M,

$$\frac{A_2M}{A_1M} = \frac{\sin A_2A_1M}{\sin A_1A_2M} = \frac{\sin(\beta + s)}{\sin \beta} = \frac{\beta + s}{\beta}.$$

But

$$\frac{2\,3}{1\,8} = \frac{A_2B_2}{A_1B_1} = \frac{A_2M}{A_1M}, \quad \therefore \frac{2\,3}{1\,8} = \frac{\beta + s}{\beta}, \quad \frac{5}{1\,8} = \frac{s'}{200'},$$

from page 5,

$$s' = 1146\frac{h}{R}, \quad \text{hence } h = 97 \text{ feet.}$$

There are two targets, one of which is 6 feet wide and the other 12 feet wide, both are of the same height. The mean point of impact is in the line joining the centres of the targets and is 3 feet from the 6-foot wide target; what distance must the 12-foot target be from the mean point of impact, so that the percentage of hits may be the same on either target?

Given that the width of the 50 °/₀ breadth zone is 6 feet.

The height or vertical errors can be neglected, since they bear the same proportion for either target.

Target A is 6 feet wide; Target B is 12 feet wide.

Let M be the mean point of impact, so that

$$O_1M = 3 + 3 = 6 \text{ feet.}$$

Fig. 31.

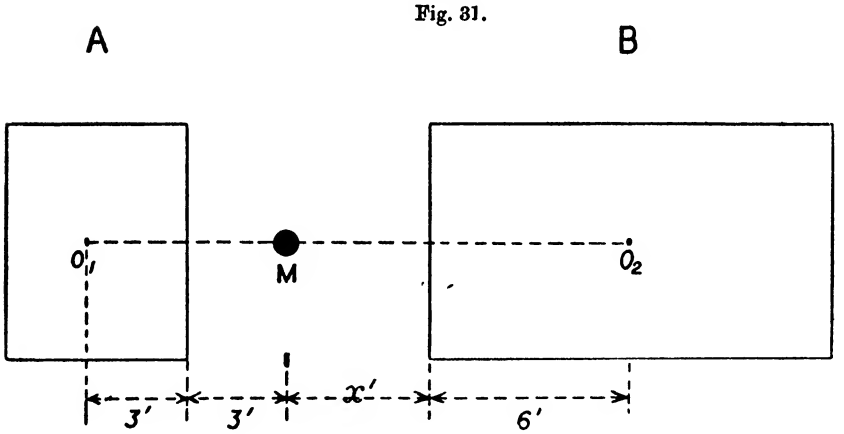

Percentage on A is

$$q_1 = \tfrac{1}{2}\left[f\left(\frac{T_1 + 2D_1}{P}\right) + f\left(\frac{T_1 - 2D_1}{P}\right)\right],$$

where

$$T_1 = 6 \text{ feet},$$
$$D_1 = 6 \text{ ,,}$$
$$P = 6 \text{ ,,}$$
$$\therefore q_1 = \tfrac{1}{2}[f(3) - f(1)]$$
$$= \tfrac{1}{2}(96 - 50)\ ^{\circ}/_{\circ}$$
$$= 23\ ^{\circ}/_{\circ}.$$

Digitized by Google

Percentage on B is

$$q_2 = \tfrac{1}{2}\left[f\left(\frac{T_2 + 2D_2}{P}\right) + f\left(\frac{T_2 - 2D_2}{P}\right)\right],$$

where

$$T_2 = 12 \text{ feet},$$

$$D_2 = (x + 6) \text{ feet},$$

$$P = 6 \text{ feet},$$

$$\therefore q_2 = \tfrac{1}{2}\left[f\left(4 + \frac{x}{3}\right) - f\left(\frac{x}{3}\right)\right].$$

Since $4 + \frac{x}{3}$ is greater than 4, then obviously $f\left(4 + \frac{x}{3}\right)$ is 100 °/₀.

And now we are to have

$$q_1 = q_2,$$

so that

$$46 \text{ °/}_0 = 100 \text{ °/}_0 - f\left(\frac{x}{3}\right)$$

$$f\left(\frac{x}{3}\right) = 54 \text{ °/}_0 = 1{\cdot}09$$

$$x = 3{\cdot}27 \text{ feet}.$$

Small Arm Ammunition.

With **small arms** very large numbers of rounds are manufactured, and a certain proportion are fired from standard rifles to test the accuracy of the ammunition; the powder or cordite is first tested separately.

A different method to artillery practice is followed in this case.

Rifles in rests are laid on large vertical targets at 500 yards, and series of 20 rounds are fired from each under as nearly as possible the same conditions. The vertical targets are 18 feet high, 12 feet wide, and are divided into smaller squares of 3 feet side, and these again into smaller ones 6 inches square. The point of impact of each round is noted and plotted on a diagram, see figs. 32, 33. The horizontal and vertical distance of each hit from some vertical and from some horizontal line is measured, the mean of each of these distances is then determined, and thus the point of mean impact; so far the plan resembles that previously described; but after this the plan adopted for small arms differs from the other: the *radial* distance of each hit from the point of mean impact is measured, and the mean of these radial distances gives the **figure of merit** furnished by the particular sample of ammunition employed.

Thus in Plate III the figure of merit of 20 rounds from a Lee-Enfield rifle on 18th July, 1905, was 5·25 inches, the ammunition on this occasion being special for Bisley.

In Plate IV the figure of merit of 20 rounds from a short Lee-Enfield rifle on 11th August, 1905, was 8·65 inches, the ammunition was some returned from South Africa and taken from loose and mixed lots.

Digitized by Google

Fig 32.

Proof of ammunition at Woolwich. 0·303-inch cordite special for Bisley.
Figure of merit 5·25 inches. Point aimed at ⊕.

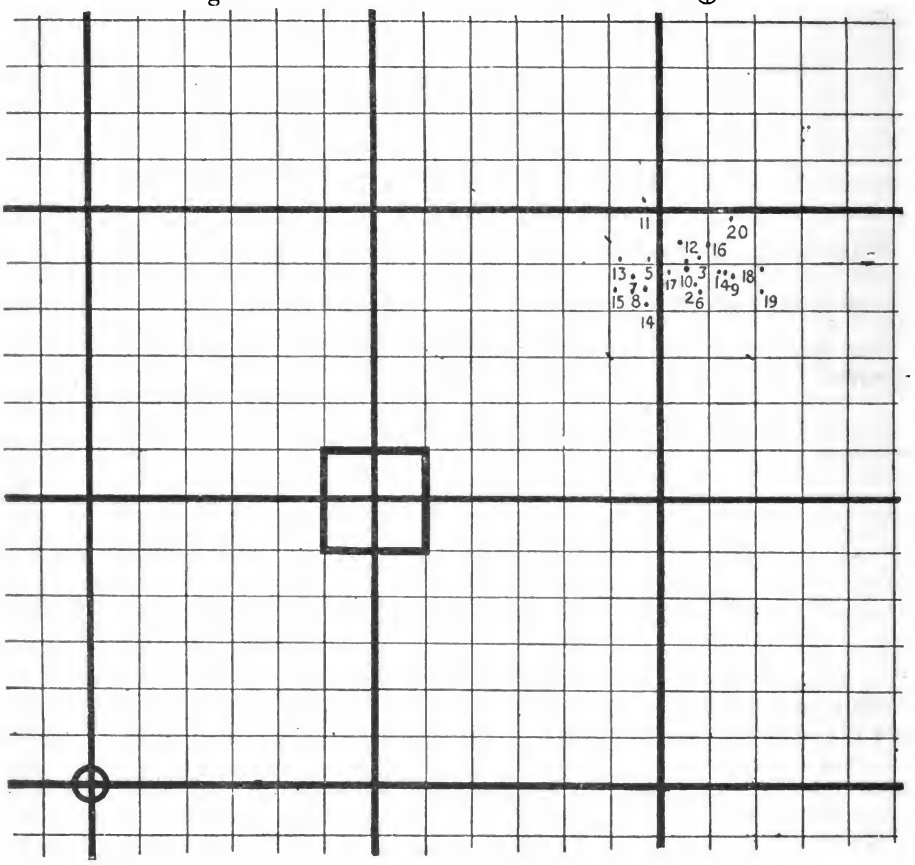

DEVIATION OF EACH SHOT.

No OF SHOT	HORIZONTAL MEASURE FT.	HORIZONTAL MEASURE IN.	VERTICAL MEASURE FT.	VERTICAL MEASURE IN.	ABSOLUTE DEVIATION FROM POINT OF MEAN IMPT FT.	ABSOLUTE DEVIATION FROM POINT OF MEAN IMPT IN.
1		1		11		4
2		10		9		3
3		11	1	1		2
4	1	2		11		4
5		9	1	1		5
6		11		9		4
7		3		10		6
8		5		9		5
9	1	3		10		6
10		9		11		1
11		4	1	8		9
12		9	1	3		3
13		1	1	1		7
14		5		7		6
15		1		9		8
16	1	0	1	3		3
17		7		11		2
18	1	7		11		2
19	1	7		9		10
20	1	3	1	5		8
TOTAL	15	8	19	5	8	9
MEAN		9	1	0	5·25	

Digitized by Google

Fig. 33.

Proof of ammunition at Woolwich. 0·303-inch cordite, mixed lots, from S. Africa. Figure of merit 8·65 inches. Point aimed at ⊕.

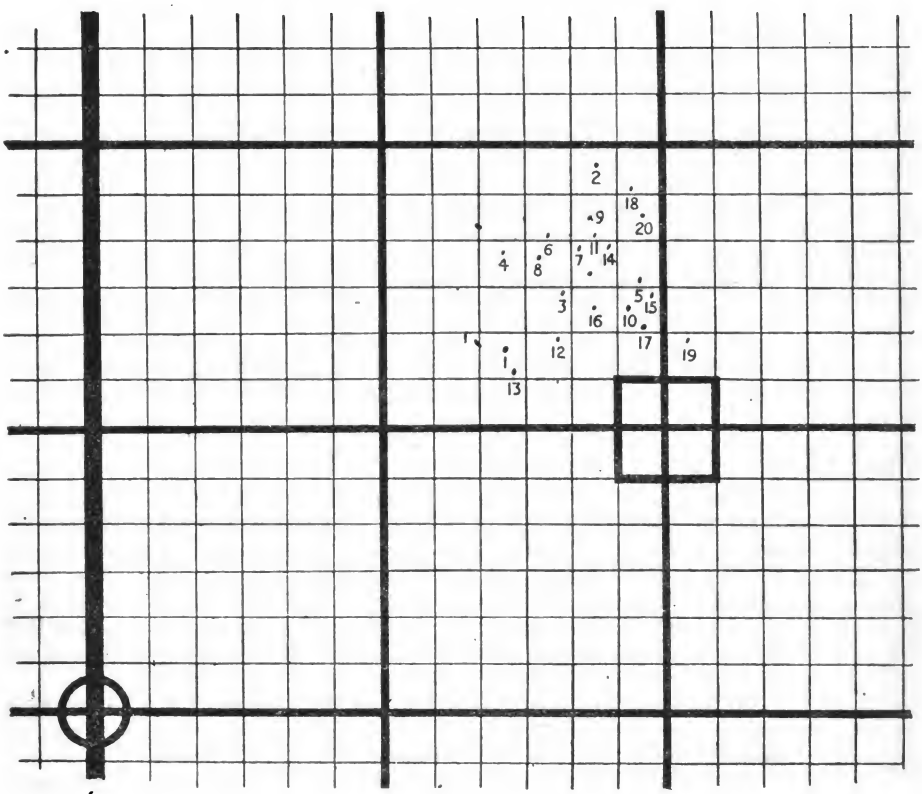

DEVIATION OF EACH SHOT.

No of Shot	Horizontal measure ft.	Horizontal measure in.	Vertical measure ft.	Vertical measure in.	Absolute deviation of point of mean impact ft.	Absolute deviation of point of mean impact in.
1		3		10	1	1
2	1	3	2	10	1	2
3		10	1	4		4
4		3	1	10		11
5	1	9	1	8		6
6		9	2	1		7
7	1	1	1	11		4
8		8	1	9		6
9	1	3	2	3		7
10	1	7	1	3		7
11	1	4	2	1		5
12		10		11		10
13		4		7	1	3
14	1	5	1	11		4
15	1	10	1	5		8
16	1	3	1	3		4
17	1	9	1	1		10
18	1	8	2	7		11
19	2	3		11	1	3
20	1	9	2	4		10
TOTAL	24	1	32	10	14	5
MEAN	1	2	1	8	8·65	

Digitized by Google

CHAPTER IV.—INTERIOR BALLISTICS.

THE investigation of the relation connecting the *pressure*, *volume*, and *temperature* of the powder gas inside the bore of a gun, and of the *work* done by the expansion of the gas, constitutes the branch of artillery science called *Interior Ballistics*.

Under the same head may be considered the Measurement of Velocity, at any point of the bore as well as outside near the muzzle; also the theory of Recoil.

SECTION I.—WORK REALISED BY THE EXPANSION OF POWDER GAS.

Definition of Work.

Work is performed when a force, P pounds or tons, pushes a body through a distance s feet; it is measured by the product Ps, called foot-pounds or foot-tons, according as P is in pounds or in tons.

The **unit of work** (called the **foot-pound**) is the amount of work which is performed in raising a weight of 1 lb. through a distance of 1 foot vertical against gravity; but for artillery purposes the **foot-ton** is the unit generally employed, *i.e.*, the amount required to raise 1 ton 1 foot high; a foot-ton contains 2,240 foot-pounds.

Work done by a uniform force can be *represented graphically* by a rectangular area in which the height is proportional to the force P, and the base to the distance s through which the force acts.

Thus, if AD is proportional to P, and AB to s (fig. 1), the area DB will represent graphically the work done.

Suppose at some point C on AB (fig. 2) the pressure suddenly alters; if at C we erect a perpendicular and mark off on it CF, proportional to the new pressure, and complete the rectangle FB, the work will be represented by the sum of the two areas DC and FB.

Fig. 1. Fig. 2. Fig. 3.

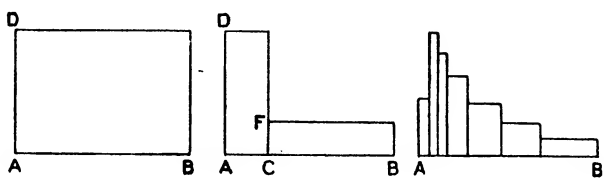

If the pressure changes more than once we must take a greater number of rectangles (fig. 3), and the sum of the areas then represents graphically the work done by a pressure P which has suddenly changed in magnitude several times in acting on the body, over the distance AB.

Digitized by Google

Now, suppose the pressure to change in magnitude, but to do so *gradually*, as in fig. 4, in this case the number of rectangles becomes indefinitely increased, and the work done is represented by the area enclosed by a curved line (the locus of the corners of an indefinite number of rectangles).

In fig. 4 we have such a diagram where the pressure (as in the bore of a gun) begins from a moderate pressure, say 10 tons per square inch, soon rises to a high maximum, say 20 tons per square inch; then falls off at the muzzle to about two or three tons per square inch, and ceases soon after the projectile leaves the muzzle.

If a force has pushed a weight through a given distance, and has caused it to move at a certain velocity, work is *stored up*.

Suppose the work stored up was produced by the weight falling from a certain height h feet, under the acceleration of gravity g, until it had attained the same velocity v f/s.

The relation between v and h under these circumstances is given by the elementary dynamical formula—

$$\tfrac{1}{2}v^2 = gh$$

or

$$h = \frac{v^2}{2g}.$$

If the body weighs w lb., the work done must by definition be wh foot-pounds; substituting the value of h just obtained, this work is equal to

$$w\,\frac{v^2}{2g} \text{ ft-lbs., or } \frac{w}{2240}\cdot\frac{v^2}{2g} \text{ ft.-tons.}$$

With foot-second units we take $g = 32$, or more accurately,

$$g = 32{\cdot}19, \log g = 1{\cdot}5077.$$

This expression is a measure of the work contained in a moving body in terms of its weight and velocity; in this form it is called kinetic energy, or, shortly, **energy**.

It should be noticed that the amount of work increases as the *square* of the velocity; thus if the weight of the projectile is unchanged, and its velocity is doubled, the energy becomes quadrupled.

The energy in ft.-lbs. due to the rotation of a rifled projectile is expressed by

$$w\,\frac{(k\omega)^2}{2g},$$

in which k is the radius of gyration in feet, and ω is the angular velocity in radians per second, because

$$\Sigma\frac{w'v^2}{2g} = \Sigma\frac{w'\omega^2r^2}{2g} = \frac{\omega^2}{2g}\Sigma w'r^2 = \frac{\omega^2}{2g}\cdot wk^2,$$

where w' is a small element of weight w', at a distance r feet from the axis, and so moving with a velocity $v = \omega r$.

The *radius of gyration* of the projectile about its axis is defined to be that radius at which the whole weight of the shot may be supposed

Digitized by Google

concentrated in a ring, without altering its energy of rotation for given angular velocity ω.

If the pitch of the rifling is b feet, the shot will make a complete turn, an angle of 2π radians, when the shot advances b feet, the twist being uniform; so that if the shot is advancing with velocity v f/s, when the angular velocity is ω radians per second, such that

$$\frac{\omega}{2\pi} = \frac{v}{b};$$

and the energy of rotation is

$$\frac{4\pi^2 k^2}{b^2} w \frac{v^2}{2g} \text{ ft.-lbs.},$$

or $\frac{4\pi^2 k^2}{b^2}$ of the energy of translation or striking energy.

This is always small in proportion to the energy due to translation, and may generally be neglected in practice.

For example: For a solid cylindrical flat-ended shot $k^2 = \frac{1}{8}d^2$ and

$$\frac{4\pi^2 k^2}{b^2} = \frac{1}{2}\frac{\pi^2 d^2}{b^2} = \frac{\frac{1}{2}\pi^2}{n^2},$$

if the pitch $b = nd$ (n calibres).

Taking $\pi^2 = 10$, the factor becomes $\frac{5}{n^2}$.

Suppose $n = 25$, then

$$\frac{\text{the energy of rotation}}{\text{the energy translation}} = \frac{4\pi^2 k^2}{b^2} = \frac{5}{n^2} = \frac{5}{625} = \frac{8}{1000}$$

$$= 0{\cdot}008 \text{ (or } 0{\cdot}8 \text{ per cent.)}.$$

The work done by the powder pressure in the bore on the projectile must equal the energy contained in the projectile and the gun, less the work lost by friction.

Thus, if P is the mean total thrust in tons on the base of the projectile exerted over a length of bore s feet, we must have

$$Ps = \frac{w}{2240} \cdot \frac{V^2}{2g};$$

where V is the muzzle velocity of the projectile in feet per second, and w its weight in pounds, if the energy of rotation and of recoil and friction is neglected here.

The following examples will illustrate these definitions of work and energy:—

On firing a 6-inch B.L. Mark VII, the powder pressure acts on the base of the shell as it moves over a distance of 238 inches; the weight of the projectile is 100 lbs., and its M.V. is 2565 f/s. What must be the mean propelling force on the base of the shell?

Here

$$d = 6,\ w = 100;\ V = 2565;\ s = \frac{238}{12};\ g = 32{\cdot}19;$$

Digitized by Google

whence

$$P = w\frac{V^2}{2gs} = \frac{100}{2240}\frac{(2565)^2}{2g}\cdot\frac{12}{238}$$
$$= 230{\cdot}2 \text{ tons.}$$

Some additional thrust is also required to compress the driving-band into the grooves.

If the mean pressure p, in tons per square inch is required, we must divide the result just obtained by the area of the cross section of the bore in square inches.

$$\tfrac{1}{4}\pi d^2 = \tfrac{1}{4}\pi \times 36 = 9\pi = 28{\cdot}3,$$

and we obtain

$$p = \frac{P}{\frac{1}{4}\pi d^2} = 8{\cdot}14 \text{ tons/in.}^2$$

The maximum pressure, however, greatly exceeds this: it may reach 17 tons/in.^{2}.

A gun is a simple thermodynamic machine or heat engine, which does its work in a single stroke, and does not work in a series of cycles, as an ordinary steam engine.

The Maxim gun, however, tends to a resemblance with a steam engine in its power of sustained repeated action.

When a gun is fired, the shot is expelled by the pressure of the powder gas, and the relation between p, the pressure, and x, the volume of the gas, is represented graphically on what may be called the *indicator diagram* of the gun by means of a curve, CPD, in

Fig. 4.

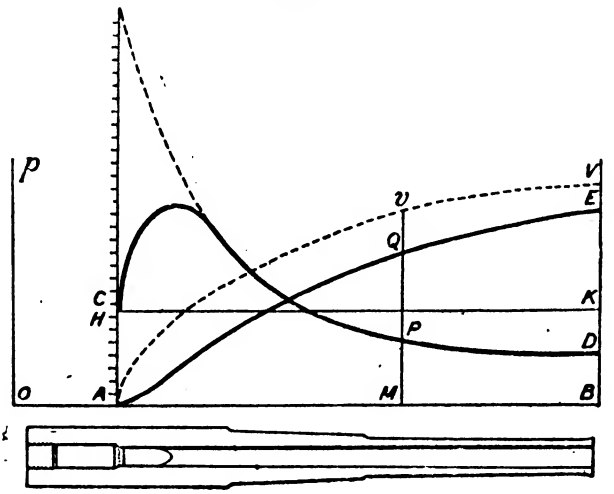

which the ordinate MP represents the pressure p, and the abscissa OM represents the volume, x, each to an appropriate scale, when the base of the shot has advanced from A to M; the curve CPD starts from a point C, such that the ordinate AC represents the pressure when the shot begins to move (fig. 4), and the curve is generally called the "pressure-space curve."

Digitized by Google

Considering that the bore of the gun is cylindrical, the volume x grows at a uniform rate with the travel of the shot, so that we can take OM to represent volumes of expansion, provided the origin O is suitably placed to allow for the extra diameter usually given to the powder chamber OA.

The area AMPC then represents the work done by the powder (per unit area or square inch of cross section of the bore) when the base of the shot has advanced from A to M, the area ABDC representing the total work per unit area done by the powder as the base of the shot is leaving the muzzle B.

If OM represents inches of advance, and MP represents tons/in.^{2} (tons per square inch), then the area AMPC represents inch-tons of work per square inch of bore reducible to foot-tons by dividing by 12.

Suppose the shot weighs w lb., and that it acquires velocity v f/s at M, then equating the kinetic energy and the work done in ft.-tons,

$$\frac{w}{2240} \cdot \frac{v^2}{2g} = \frac{\text{area AMPC}}{12} \times \tfrac{1}{4}\pi d^2.$$

This supposes the bore is smooth; but if it is rifled with a pitch of b feet, the angular velocity at M is $\frac{2\pi v}{b}$ radians per second; so that if the radius of gyration of the shot about its axis is k feet, the kinetic energy is replaced by

$$\frac{w}{2240} \cdot \frac{v^2}{2g}\left(1 + \frac{4\pi^2 k^2}{b^2}\right) \text{ft.-tons};$$

and to allow for the friction of the bore, an empirical deduction is made from the pressure, represented in full by MP.

The curve of energy, AQE, is drawn such that its ordinate MQ represents to scale the work done by the powder, or the kinetic energy acquired by the shot, each proportional to the area AMPC; and thence the velocity curve AvV can be drawn, in which the ordinate Mv represents the velocity v, so that Mv is proportional to the square root of MQ

The pressure in the bore is determined experimentally by *crusher gauges*, described below; these are screwed into the bore at regular intervals in its length, as shown in the figure opposite, or else inserted in the projectile, or left loose behind the charge.

As a check upon the indications of the pressure gauges, Sir Andrew Noble inserts also a number of plugs, connected electrically with his chronoscope, and thereby determines experimentally the time occupied by the shot in its passage up the bore; thence the velocity at each point is inferred by calculation in exactly the same manner as the velocity outside from screen records, and the velocity curve can be drawn.

The energy curve is derived from this velocity curve, and thence the effective pressure accelerating the shot is determined; and these pressures are compared with the pressure recorded by the crusher gauges.

If the gun is free to recoil, there is a similar indicator diagram for the gun, representing the pressure or thrust on the base of the bore, or on the breech piece, at corresponding points of the length of the recoil.

Digitized by Google

Fig. 5.

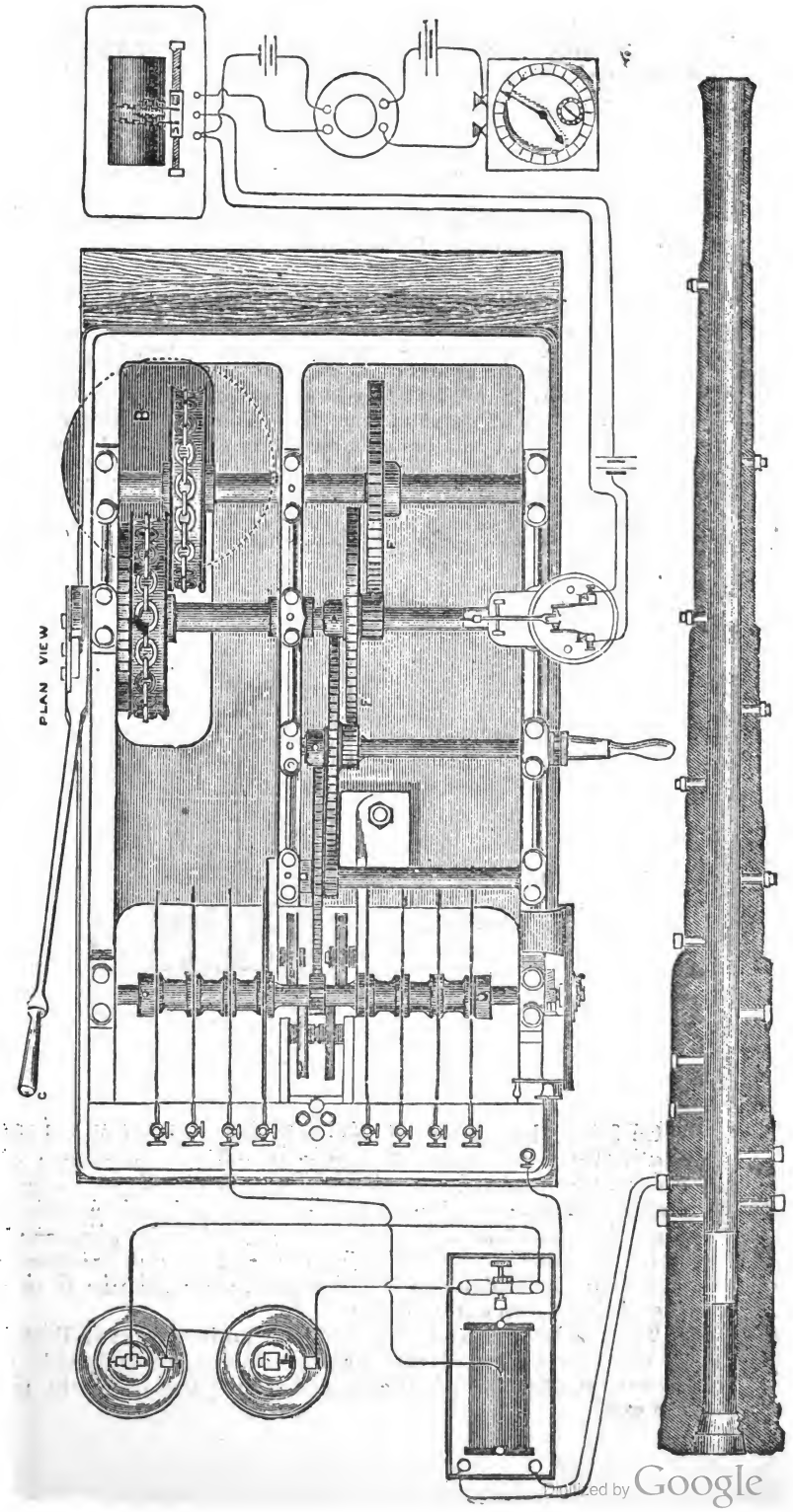

Digitized by Google

The recoil can be measured at any instant by Colonel Sebert's velocimeter, consisting of a strip of smoked steel attached to the gun, on which, in recoiling, a wavy line is traced by a point on a fixed tuning fork, the period of which is known accurately, and this record is another independent check upon the previous methods.

The Service Crusher Gauge.

This crusher gauge is used to obtain the chamber pressure in guns. Fig. 6 shows a section of the gauge.

It consists of a short steel cylinder, into which is screwed a cap, through the centre of which is accurately bored a hole one-sixth of a square inch in sectional area, and in this fits the piston.

By unscrewing the cap, the copper cylinder (D) can be inserted or removed from the chamber in the gauge; whilst inside the gauge, the copper (D) is held tightly (but not prevented from expanding) by a small piece of watch spring (E). This should keep the copper in a central position, with one extremity in contact with the end of the chamber and the other with the head of the piston (C); a small gas-check (F) of copper is fitted in the nozzle of the cap after the piston has been placed into position, so that its expansion prevents any penetration of gas into the chamber of the gauge.

Fig. 6. Scale full size.

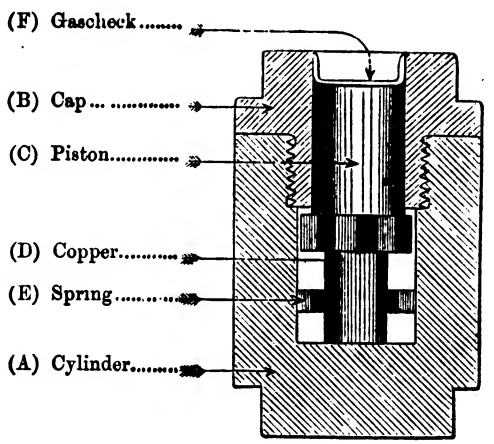

On firing, the pressure of the gas acting upon the end of the piston compresses and shortens the copper cylinder. The crusher gauge is then taken out, the cap unscrewed, and the copper removed; its length is carefully measured by a micrometer to the thousandth of an inch. In guns loaded by hand, one or two of these gauges are placed at the rear end of the chamber; in Q.F. guns they are placed at the base of the cartridge case. The object of this position is to prevent their being blown out on firing.

The crusher gauges are generally found in the bore a little in front of the forward end of the chamber; but occasionally they may get blown out, and they are then found a few yards from the muzzle of the gun.

Digitized by Google

THE NEW YORK
PUBLIC LIBRARY,
ASTOR, LENOX AND
TILDEN FOUNDATIONS.

Digitized by Google

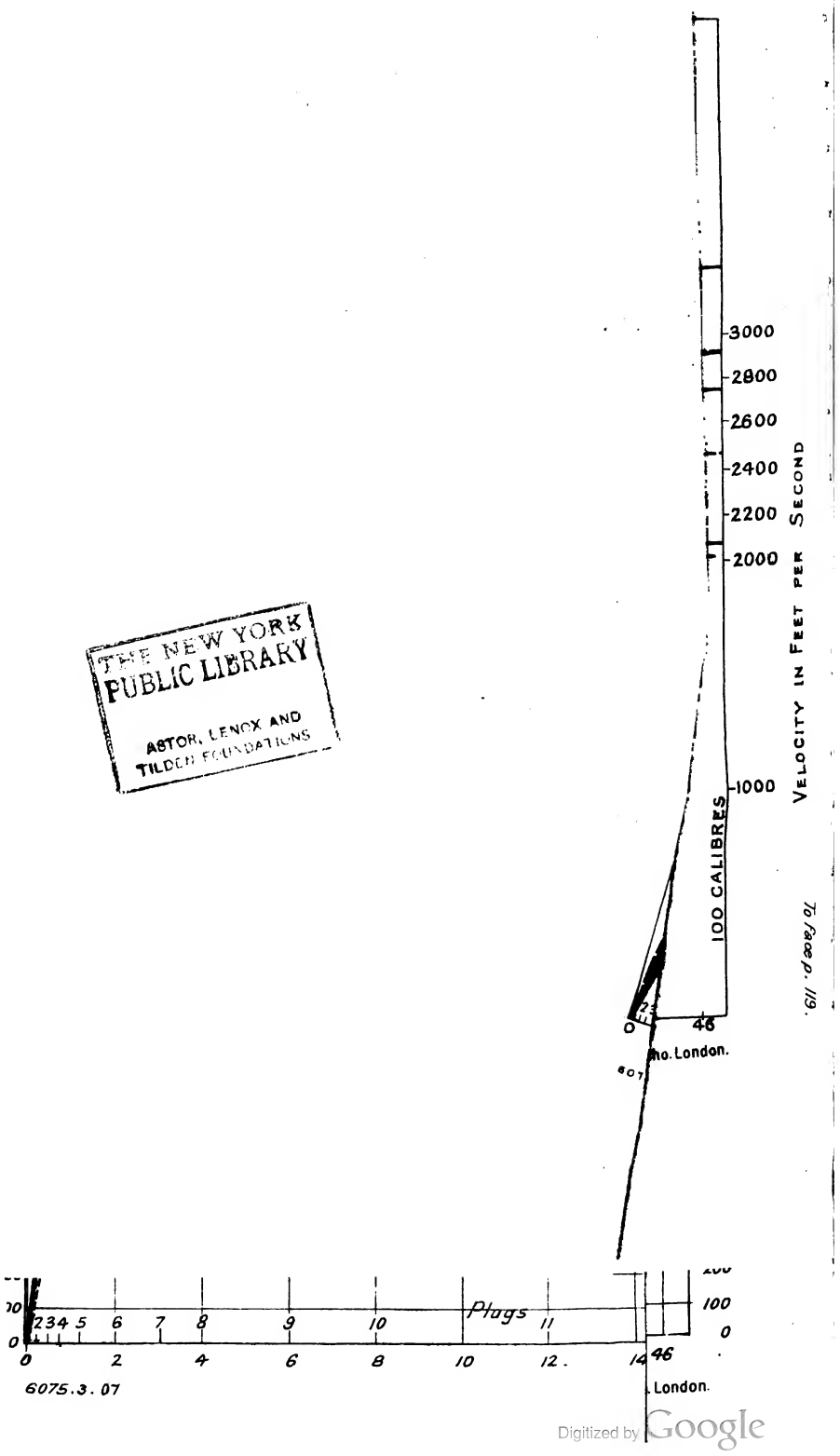

THE NEW YORK PUBLIC LIBRARY
ASTOR, LENOX AND TILDEN FOUNDATIONS

Digitized by Google

The following points should be attended to when using crusher gauges:—

(*a*) That the copper is placed fair in the gauge, and is not tilted.
(*b*) That the piston is pressed down on the copper, and does not return again from the compression of the air in the gauge.
(*c*) That the piston is free to move—not tight. It should be capable of being moved to and fro by the finger; a little Russian tallow applied to the piston, and also to the gas-check, facilitates the action and helps to keep the gas out.
(*d*) The gauge should be examined from time to time, to see that the piston hole is not conical instead of cylindrical, as it is found that the pressure has a tendency to make the piston hole smaller at the outer end, and, when this happens, the hole should be brought to size by careful lapping with emery.

The pressure in tons per square inch corresponding to any measured reduced length is then ascertained by reference to a table compiled originally from the compression of similar coppers in a statical pressing machine.

This table has been calculated to give the pressure in tons per square inch when a piston 0·461 inch in diameter (one-sixth of a square inch in sectional area) is used with a copper cylinder 0·5 inch long, and 0·326 inch in diameter (one-twelfth of a square inch sectional area).

Copper cannot always be obtained of the same uniform hardness as the sample for which the table for the crusher-gauge was drawn up. The half-inch cylinders are therefore subjected in a machine to pressure corresponding to 9, 12, and 15 tons per square inch, and those cylinders that after this treatment register a pressure differing from the tabular amount by more than 5 per cent. are rejected as unfit for use; for proof of cordite and other important experiments, the difference from the tabular amount should not exceed 1 per cent.

Thus no copper should be accepted that, having been pressed under 12 tons/in.^{2} in the machine, recorded by the table either less than 11·4 tons/in.^{2} or more than 12·6 tons/in.^{2}.

Coppers should be selected that have been pressed to about a ton/in.^{2} under the pressure expected in the gun.

For the coppers that fall between the limits of rejection a correction is made as shown in the two following examples:—

(1) A 12-ton copper before firing shows a length of 0·384 inch, and, after firing, a length of 0·348.

It will be seen from the table of corrective fractions that for a length of 0·384 the copper is $\frac{1}{60}$th soft, and a reduction of $\frac{1}{60}$th per ton must therefore be made from the pressure recorded after firing. From the length pressure table we see that a length of 0·348 corresponds to a pressure of 14·9 tons in.^{2}, then 14·9 tons less $\frac{1}{60}$th of 14·9 gives the true pressure, viz., 14·7 tons in.^{2} (neglecting hundredths).

(2) A 12-ton copper before firing shows a length of 0·390 inch, and after firing 0·348 inch. In this case the copper is $\frac{1}{40}$ hard, and the true pressure becomes 15·2 tons in.^{2}.

The results of chronoscope experiments with the 6-inch gun are shown diagrammatically in figs. 7 and 8 (pressure-space curves), and in figs. 9 and 10 (velocity-space curves).

Digitized by Google

TABLE giving the lengths of copper cylinders, 0·326 inch in diameter ($\frac{1}{12}$ of a square inch sectional area), and corresponding pressure per square inch in a Crusher Gauge, the piston of which is 0·461 inch in diameter ($\frac{1}{6}$ of a square inch sectional area).

Length.	Pressure.	Length.	Pressure.	Length.	Pressure.	Length.	Pressure.
Inches.	Tons/in.²	Inches.	Tons/in.²	Inches.	Tons/in.²	Inches.	Tons/in.²
0·500	0·0	0·412	10·0	0·324	16·8	0·236	25·9
·498	1·6	·410	10·2	·322	17·0	·234	26·2
·496	2·2	·408	10·3	·320	17·1	·232	26·5
·494	2·7	·406	10·5	·318	17·3	·230	26·8
·492	3·0	·404	10·6	·316	17·5	·228	27·1
·490	3·2	·402	10·8	·314	17·6	·226	27·4
·488	3·5	·400	11·0	·312	17·8	·224	27·8
·486	3·7	·398	11·1	·310	18·0	·222	28·1
·484	4·0	·396	11·3	·308	18·2	·220	28·5
·482	4·2	·394	11·4	·306	18·3	·218	28·8
·480	4·4	·392	11·5	·304	18·5	·216	29·2
·478	4·6	·390	11·7	·302	18·7	·214	29·6
·476	4·8	·388	11·9	·300	18·8	·212	30·0
·474	5·0	·386	12·0	·298	19·0	·210	30·4
·472	5·1	·384	12·2	·296	19·2	·208	30·8
·470	5·2	·382	12·3	·294	19·3	·206	31·2
·468	5·5	·380	12·5	·292	19·5	·204	31·6
·466	5·6	·378	12·6	·290	19·7	·202	32·0
·464	5·8	·376	12·7	·288	19·8	·200	32·5
·462	5·9	·374	12·9	·286	20·0	·198	32·9
·460	6·1	·372	13·1	·284	20·2	·196	33·4
·458	6·3	·370	13·2	·282	20·4	·194	33·9
·456	6·4	·368	13·3	·280	20·6	·192	34·4
·454	6·6	·366	13·5	·278	20·8	·190	34·9
·452	6·8	·364	13·6	·276	20·9	·188	35·4
·450	6·9	·362	13·8	·274	21·1	·186	35·9
·448	7·1	·360	14·0	·272	21·3	·184	36·4
·446	7·3	·358	14·1	·270	21·5	·182	36·9
·444	7·5	·356	14·3	·268	21·7	·180	37·4
·442	7·6	·354	14·4	·266	21·9	·178	37·9
·440	7·8	·352	14·6	·264	22·2	·176	38·5
·438	8·0	·350	14·7	·262	22·4	·174	39·1
·436	8·1	·348	14·9	·360	22·6	·172	39·7
·434	8·3	·346	15·0	·258	22·9	·170	40·2
·432	8·4	·344	15·2	·256	23·2	·168	40·7
·430	8·6	·342	15·3	·254	23·4	·166	41·2
·428	8·7	·340	15·5	·252	23·6	·164	41·9
·426	8·9	·338	15·7	·250	23·9	·162	42·3
·424	9·1	·336	15·9	·248	24·2	·160	42·9
·422	9·2	·334	16·0	·246	24·5	·158	43·5
·420	9·4	·332	16·1	·244	24·7	·156	44·1
·418	9·6	·330	16·3	·242	25·0	·154	44·8
·416	9·7	·328	16·5	·240	25·3	·152	45·5
·414	9·9	·326	16·6	·238	25·6	·150	46·1

Digitized by Google

TABLE giving the Correcting Fraction for Hardness or Softness corresponding to certain lengths before firing, and to be applied to the pressure corresponding to the length after firing.

Pressure before Firing 15 tons/in.²		Pressure before Firing 12 tons/in.²		Pressure before Firing 9 tons/in.²		Pressure before Firing 6 tons/in.²	
Length before Firing.	Fraction Soft—S. Hard—H.	Length before Firing.	Fraction Soft—S. Hard—H.	Length before Firing.	Fraction Soft—S. Hard—H.	Length before Firing.	Fraction Soft—S. Hard—H.
Inches.		Inches.		Inches.		Inches.	
·338	$\frac{7}{150}$ S.	·378	$\frac{1}{20}$ S.	—	—	·458	$\frac{1}{20}$ S.
·339	$\frac{1}{25}$ S.	·379	$\frac{11}{240}$ S.	—	—	·459	$\frac{1}{30}$ S.
·340	$\frac{1}{30}$ S.	·380	$\frac{1}{24}$ S.	·419	$\frac{1}{18}$ S.	·460	$\frac{1}{60}$ S.
·341	$\frac{9}{750}$ S.	·381	$\frac{1}{30}$ S.	·420	$\frac{9}{450}$ S.	·461	Correct
·342	$\frac{1}{50}$ S.	·382	$\frac{1}{40}$ S.	·421	$\frac{1}{30}$ S.	·462	$\frac{1}{60}$ H.
·343	$\frac{1}{60}$ S.	·383	$\frac{1}{48}$ S.	·422	$\frac{1}{45}$ S.	·463	$\frac{1}{40}$ H.
·344	$\frac{1}{75}$ S.	·384	$\frac{1}{60}$ S.	·423	$\frac{1}{60}$ S.	·464	$\frac{1}{30}$ H.
·345	$\frac{1}{150}$ S.	·385	$\frac{1}{120}$ S.	·424	$\frac{1}{90}$ S.	·465	$\frac{1}{20}$ H.
·346	Correct.	·386	Correct.	·425	Correct.		
·347	$\frac{1}{300}$ H.	·387	$\frac{1}{240}$ H.	·426	$\frac{1}{90}$ H.		
·348	$\frac{1}{150}$ H.	·388	$\frac{1}{120}$ H.	·427	$\frac{1}{45}$ H.		
·349	$\frac{1}{75}$ H.	·389	$\frac{1}{60}$ H.	·428	$\frac{1}{30}$ H.		
·350	$\frac{1}{50}$ H.	·390	$\frac{1}{40}$ H.	·429	$\frac{7}{180}$ H.		
·351	$\frac{7}{300}$ H.	·391	$\frac{1}{30}$ H.	·430	$\frac{7}{45}$ H.		
·352	$\frac{9}{750}$ H.	·392	$\frac{1}{24}$ H.	·431	$\frac{1}{18}$ H.		
·353	$\frac{1}{30}$ H.	·393	$\frac{11}{240}$ H.	—	—		
·354	$\frac{1}{25}$ H.	·394	$\frac{1}{20}$ H.	—	—		
·355	$\frac{13}{300}$ H.						
·356	$\frac{7}{150}$ H.						

Digitized by Google

Gravimetric Density.

The gravimetric density of the charge in the chamber of a gun is the ratio of its weight to the weight of that volume of water which would fill the space behind the projectile in the gun; or it is the specific gravity of the gaseous products of combustion which fill the chamber when the charge (cordite) is fired.

When a charge of P lbs. is placed in a chamber of C cubic inches, we have

$$\frac{C}{P} \text{ cubic inches to each lb. of charge,}$$

so that

$$1 \text{ cubic inch weighs } \frac{P}{C} \text{ lb.}$$

Also

27·73 cubic inches of water at 62° F. weigh 1 lb.

$$\therefore \text{ 1 cubic inch of water weighs } \frac{1}{27{\cdot}73} \text{ lb.}$$

Gravimetric density (G.D.) or specific gravity of charge

$$= \frac{\text{weight of 1 cubic inch of charge}}{\text{weight of 1 cubic inch of water}}$$

$$= \frac{\frac{P}{C}}{\frac{1}{27{\cdot}73}} = 27{\cdot}73\,\frac{P}{C}$$

$$\therefore \text{ G.D.} = 27{\cdot}73\,\frac{P}{C}.$$

The specific volume (S.V.) of a charge is the number of cubic inches allotted to one pound of the charge, so that

$$\text{S.V.} = \frac{C}{P} \text{ ins.}^3\text{/lb.}$$

With metric units, if P is in grammes and C in cubic centimetres,

$$\text{G.D.} = \frac{P}{C}$$

$$\text{S.V.} = \frac{C}{P} \text{ cm.}^3\text{/gramme,}$$

and no factor 27·73 is required, because 1 cubic centimetre of water weighs 1 gramme.

As an example, in the 6-inch B.L. Mark VII., the capacity of the chamber is 1715 cubic inches, and the charge is 20 lbs. cordite Mark I.

$$\text{S.V.} = \frac{1715}{20} = 85{\cdot}75,$$

$$\text{G.D.} = 27{\cdot}73 \times \frac{20}{1715} = 0{\cdot}3233,$$

Digitized by Google

and so the charge for this gun is expressed as 20 lbs. cordite Mark I,

$$\text{density } \frac{85{\cdot}75}{0{\cdot}323}$$

In the same gun, if the charge is 23 lbs. of cordite M.D., then the

$$\text{S.V.} = 74{\cdot}56 \text{ ins.}^3/\text{lb.},$$

$$\text{G.D.} = 0{\cdot}372,$$

so that

$$\text{density is expressed as } \frac{74{\cdot}56}{0{\cdot}372}.$$

Gravimetric volume (G.V.) is the reciprocal of gravimetric density, so that

$$\text{G.V.} = \frac{C}{27{\cdot}73P} \left(= \frac{C}{P} \text{ in the metric system}\right)$$

$$= \frac{\text{volume of the gas}}{\text{volume of an equal weight of water}}.$$

Explosion Vessel.

An explosion vessel consists of a chamber with very strong walls of mild steel; in this, a charge of explosive is placed and fired electrically; the pressure is noted by means of a crusher gauge enclosed, and the permanent gas can be drawn off and examined. (Experiments of Sir Andrew Noble and Sir Frederick Abel, Phil. Trans. 1875, 1880, 1892, 1894.)

In figs. 11 and 12 is a mild steel vessel of great strength, carefully tempered in oil, in the chamber of which (B) the charge to be exploded is placed. The chamber is capable of holding 1 kg. of powder, or 1 litre of water.

The main orifice of the chamber is closed by a screwed plug (C), called the firing plug, which is fitted and ground into its place with great exactness.

Fig. 11.

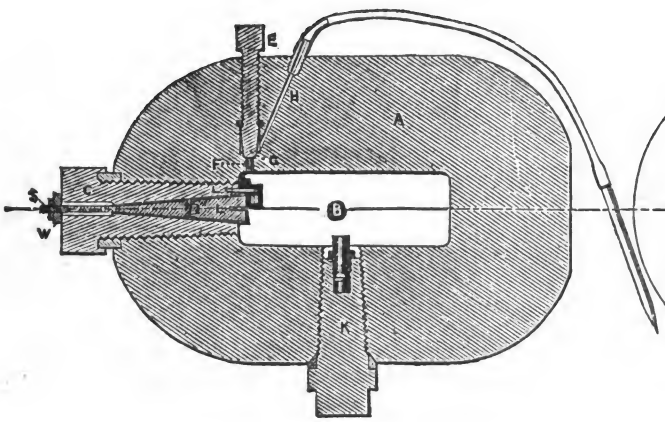

Fig. 12.

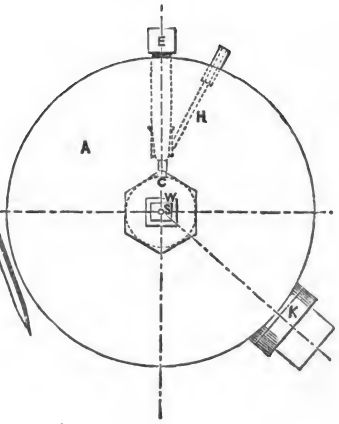

In the firing plug itself is a conical hole, which is stopped by the plug D, also ground into its place with great accuracy. As the firing plug is generally placed on the top of the cylinder, and as, before

Digitized by Google

firing, the conical plug would drop into the chamber if not held, it is retained in position by means of the set-screw S, between which and the cylinder a small washer (W) of ebonite is placed. After firing the cone is, of course, firmly held, and the only effect of internal pressure is more completely to seal the aperture. At E is the arrangement for letting the gases escape; the small hole (F) communicates with the chamber where the powder is fired, and perfect tightness is secured by means of the mitred surface (G).

When it is wished to let the gases escape, the screw (E) is slightly withdrawn, and the gas passes into the passage H.

At K is placed the crusher apparatus for determining the pressure at the moment of explosion.

When it is desired to explode a charge, the crusher apparatus, after due preparation, is first carefully screwed into its place, and the hole (F) closed. The cone in the firing plug is covered with the finest tissue paper, to act as an insulator.

The two wires (L, L), one in the insulated cone, the other in the cylinder, are connected by a very fine platinum wire passing through a small glass tube filled with mealed powder. Upon completing connection with a Daniell's battery the charge is fired.

The only audible indication of the explosion is a slight click; but frequently, upon approaching the nose to the apparatus, a faint smell of sulphuretted hydrogen is perceptible.

Great care was necessary in exploding the powder in this chamber, and any looseness of screws at once gave an exit to the gas, which washed away the metal of the threads in its rapid rush. When such a state of things occurred, the metal had apparently been fused.

Fig. 13 shows an explosion vessel, which is even stronger made, being wound with steel wire.

Fig. 13.

EXPLOSION VESSEL.

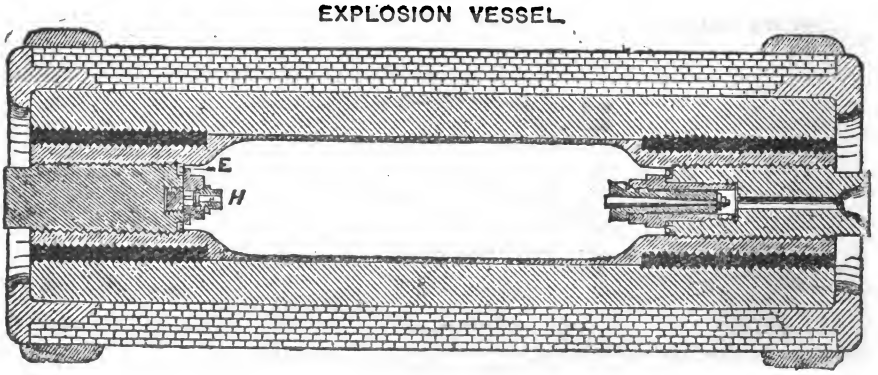

The maximum pressure only is recorded by the crusher gauge, but explosion vessels of new pattern are arranged for recording the time rate at which the pressure rises to the maximum.

The volume of the chamber of the explosion vessel is known accurately, and the gravimetric density of a charge (P lbs.) to be exploded is given by

$$G.D. = 27{\cdot}73\,\frac{P}{C}.$$

Digitized by Google

Digitized by Google

THE NEW YORK
PUBLIC LIBRARY

ASTOR, LENOX AND
TILDEN FOUNDATIONS.

Digitized by Google

Thus, if the chamber capacity is 27·73 cubic inches, then a charge of 1 lb. would have a density of loading equal to 1, and a charge of 4 ozs. a density equal to $27{\cdot}73 \frac{0{\cdot}25}{27{\cdot}73} = 0{\cdot}25$, and so on.

The maximum pressure recorded depends upon the density of loading of each charge.

The latest and very exhaustive experiments on explosives are those carried out by Sir Andrew Noble, K.C.B., F.R.S., and the following information is taken from his paper in the Philosophical Transactions of the Royal Society of London, Series A, vol. 205, pp. 201–236, 1905 and 1906.

TABLE of Pressure in Explosion Vessel.

G.D. of charge exploded.	Pressure in tons per square inch.	
	Cordite Mark I.	Cordite M.D.
0·05	2·9	2·7
0·10	7·8	6·9
0·15	11·49	10·2
0·20	17·2	15·2
0·25	21·08	20·7
0·30	30·5	27·62
0·40	41·4	38·1
0·50	52·9	43·22

The curve diagrams (fig. 14) show the rate of cooling of the gases in the explosion vessel, that is the rate at which they communicate the heat accompanying the explosion to the walls of the vessel in which the explosion takes place.

By means of Sir A. Noble's diagram giving the relationship between density of charge in an explosion vessel and the recorded pressure, the work capable of being done by one pound of cordite Mark I or M.D. in foot-tons, as the volume changes from unity to any other volume can be obtained; the unit volume is 27·73 cubic inches.

Digitized by Google

WORK capable of being done by one pound of Cordite M.D., in expanding from Volume Unity with Unit Gravimetric Density.

Gravimetric volume.	Work in foot-tons.	Gravimetric volume.	Work in foot-tons.	Gravimetric volume.	Work in foot-tons.
1·00	0·00	5·5	387·3	28	649·0
1·05	12·95	6·0	403·7	29	654·0
1·10	21·14	6·5	418·6	30	658·5
1·15	36·6	7·0	431·2	31	662·5
1·20	47·5	8·0	455·0	32	667·0
1·25	58·0	9·0	474·0	33	671·0
1·3	67·8	10·0	493·5	34	675·0
1·4	86·5	11·0	509·0	35	678·0
1·5	103·4	12·0	525·0	36	682·5
1·6	119·5	13·0	536·0	37	685·5
1·7	134·7	14·0	547·5	38	688·5
1·8	148·6	15·0	558·0	39	692·0
1·9	161·5	16·0	568·0	40	695·0
2·0	173·8	17·0	577·5	41	698·0
2·1	184·8	18·0	586·0	42	701·0
2·2	195·6	19·0	594·0	43	704·0
2·3	205·6	20·0	601·5	44	707·0
2·4	215·2	21·0	608·5	45	709·0
2·5	224·3	22·0	615·0	46	712·0
3·0	264·2	23·0	621·5	47	715·0
3·5	296·8	24·0	627·5	48	717·0
4·0	324·3	25·0	633·0	49	719·0
4·5	347·9	26·0	638·0	50	721·0
5·0	368·8	27·0	644·5		

From fig. 15, the curve giving the relationship between the pressure and the gravimetric volume can be deduced, and by the quadrature of this curve, the work E in foot tons realised by the expansion of 1 lb. of cordite M.D. gas from one gravimetric volume to another can be obtained, on the assumption that the pressure in the closed vessel is the same as when the gas is expanded in the bore of the gun. By this method the above table of work done by 1 lb. of cordite M.D. is obtained.

Suppose the average pressure is p-tons/in.^{2} at an average G.V. v, then while the G.V. changes by Δv from $v - \frac{1}{2}\Delta v$ to $v + \frac{1}{2}\Delta v$, a change of volume of 27·73 Δv in.^{3}, the work done is 27·73 $p\Delta v$ in.-tons, or in ft.-tons

$$\Delta E = 2{\cdot}31\, p\Delta v.$$

A summation of all the values of ΔE, as is done in the Ballistic Tables, gives E.

Conversely, from a table of E in terms of v, the value of p can be found from the formula

$$p = \frac{1}{2{\cdot}31} \cdot \frac{\Delta E}{\Delta v}.$$

In calculating the muzzle energy and velocity to be expected from a given charge of P lbs. of the cordite in expanding from the volume C in.^{3} of the chamber to the total volume B in.^{3} of the bore, including

Digitized by Google

the chamber, the initial and final gravimetric volumes (G.V.) denoted by v_0 and v_1 are calculated from

$$v_0 = \frac{C}{27 \cdot 73P}, \quad v_1 = \frac{B}{27 \cdot 73P},$$

and then the difference

$$E(v_1) - E(v_0)$$

of the corresponding values of E, multiplied by P, the charge in lb., gives the maximum realisable work in ft.-tons.

In practice, a factor f is employed to obtain the actual net realised work stored up in the shot on leaving the muzzle.

Digitized by Google

SECTION II.—MEASUREMENT OF VELOCITY.

For ordinary purposes, such as proving cordite, by finding what velocity a given charge will impart to a given projectile in a gun, the **Boulengé chronograph** is employed.

The original pattern of Le Boulengé was subsequently improved upon by Captain Bréger, of the French marine artillery, with a view to reduce the mechanical and electrical sources of error.

The general principle of its action remaining as before, the Boulengé-Bréger instrument has been improved recently by Major H. C. L. Holden, R.A.; besides alterations in the instrument itself, all the regulating appliances are now grouped together on a board; better forms of rheostats, and a much more accurate disjunctor have been fitted, and a commutator has been introduced, the use of which will be explained later on.

Fig. 2 shows the instrument as improved by Major Holden; fig. 3, is the new disjunctor; and fig. 4 is a diagram of the connections on the switch or instrument board.

The whole arrangement consists of two separate parts:—

(1.) That on the proof ground consisting of gun position, butt, and the mechanical arrangement whereby the electrical circuits are broken by the projectile, viz., screens and the system of electrical circuits (*see* the right-hand side of fig. 1).

(2.) The instrument room containing the chronograph, batteries, regulating and testing appliances, also electric circuits in connection with those on the proof ground (as shown on the left).

Digitized by Google

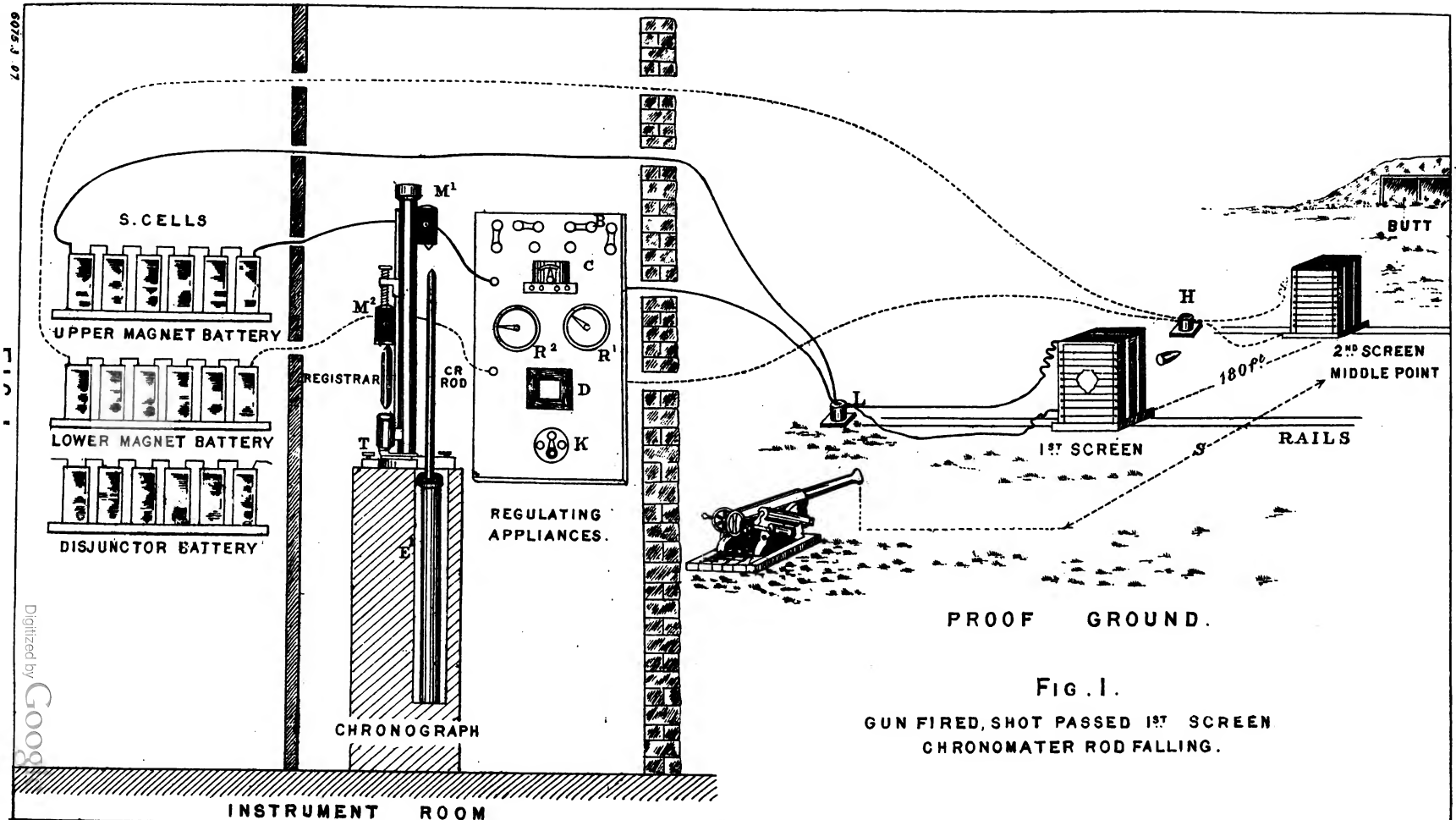

FIG. I.

GUN FIRED, SHOT PASSED 1ST SCREEN
CHRONOMATER ROD FALLING.

To face p. 128

Weller & Graham, Ltd Litho London.

Digitized by Google

THE NEW YORK
PUBLIC LIBRARY

ASTOR, LENOX AND
TILDEN FOUNDATIONS.

Digitized by Google

Fig. 1.

Digitized by Google

From the instrument room, about 300 yards distant, a number of copper wires insulated with gutta-percha are severally connected to the instruments at one end, and on the proof ground are led up into strong cast-iron boxes H and L (fig. 1) above the surface of the ground and fixed to terminals on ebonite bars in the boxes. The

Fig. 2.

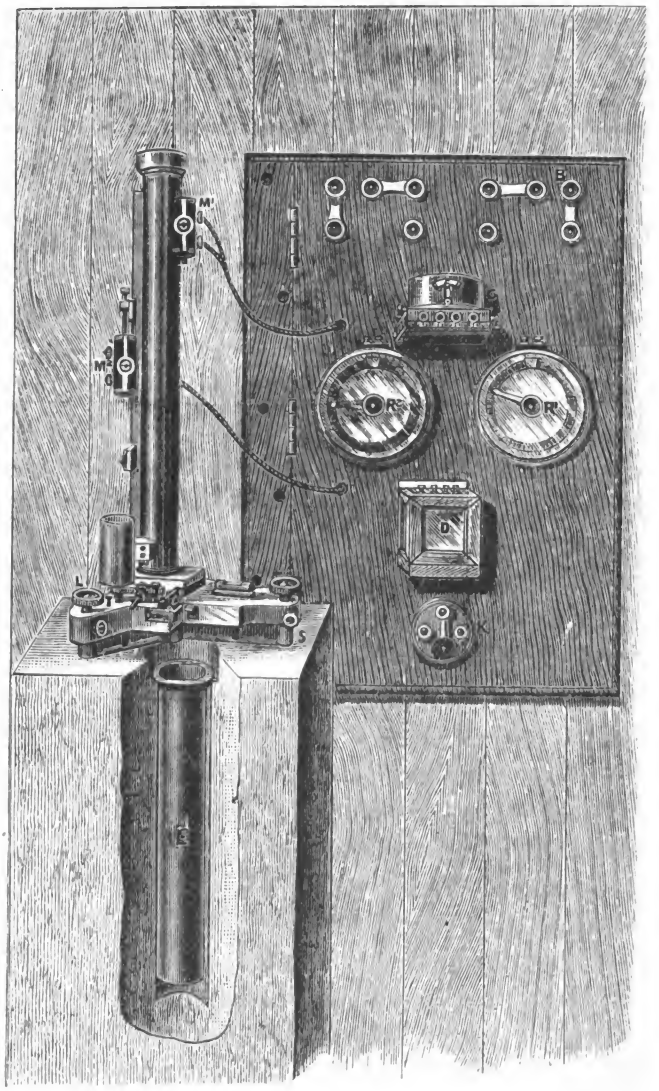

screens themselves consist of upright oblong wooden frames, about 8 feet high by 4 feet wide between the sides, and they are combined in sets of two or three on one stand, so that the records for two or three instruments may be obtained simultaneously and independently of each other.

Digitized by Google

The frames are provided on their two vertical faces with a series of insulated pegs, so that a wire can be stretched continuously backwards and forwards across the frame from top to bottom of it, for the shot to cut, the distance between each return of wire being always less than the diameter of the shot fired.

One end of the wire wound on the screen is attached to the outgoing wire from the terminal box, and the other end to the return wire. The general arrangement will be seen by fig. 1 ; only, for the sake of clearness, the wires from the instruments to the terminal boxes are shown in the air instead of underground.

The screens slide sideways on rails fixed accurately 180 feet apart. The distance of the first screen from the muzzle of the gun being from 190 to 150 feet with guns of large calibre, though a much smaller distance is ample for light guns, on account of the disturbance due to their muzzle blast being less.

In the instrument room, the chronograph (fig. 2) consists of a substantial vertical brass pillar which supports two electro-magnets, M^1 on its right-hand side, and M^2 on its left. Of these two magnets, M^1 is fixed permanently, whilst M^2 can be moved up and down the pillar by means of quick and slow motions, and can be clamped temporarily in any position. The pillar stands on a triangular base which can be levelled by means of the levelling screws and two spirit levels at right angles to each other.

The concrete pillar should not touch the floor or walls of the building in which it is built, as if it did so, it would be liable to participate in the vibration.

The electro-magnets, M^1 and M^2, are exactly similar, mechanically, electrically, and magnetically, and they are capable of supporting from their conical-ended projecting iron cores two rods weighing 14 ounces each. The one that is supported by the magnet M^1 being some 22 inches long, and the other 5 inches long. They are both provided with bobs at their lower end to keep the centre of gravity as low as possible.

Sketch of Trigger.

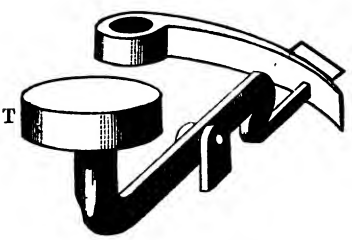

(*a*) Cocked.

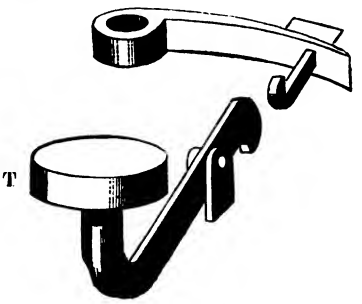

(*b*) Spring released so that the knife on it may mark the chronometer rod.

The longer, or "chronometer rod," when released from the magnet M_1 falls into a tube; but the shorter rod or "registrar," supported by the magnet M^2 falls through a guard tube on to a trigger table, T, which is thereupon pressed down, releasing a spring which has affixed to it a cutting edge, and is situate on the right-hand side of the base of the pillar. This spring, carrying the cutting edge, moves

Digitized by Google

to the right in a horizontal plane, and when it comes in contact with the falling chronometer rod makes a mark thereon which constitutes the record.

1. *The Rheostats* R^1, R^2, *or Adjustable Resistances.*—These are of circular form, and so arranged that, by moving the radial arm, resistance can be interposed or taken out of the circuit without breaking it. One rheostat is included in the circuit of each electro-magnet, and serves to regulate the current through the coil.

2. *The Disjunctor D.*—This is shown, with the cover removed, in fig. 3. It consists of an electro-magnet, the armature of which forms one end of a swinging ⅂-shaped frame, and is situate horizontally

Fig. 3.

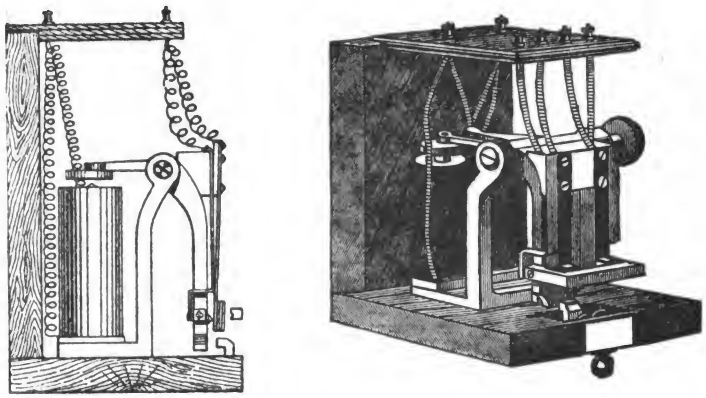

above the poles of the magnet. The vertical, or other leg of the swinging frame, carries two flat steel springs of equal strength, separately insulated, and loaded at their lower extremities by brass weights, which in the position of rest make contact through iridium contact points with two fixed contacts also attached to the frame. A guardpiece extends from one side of the frame to the other, and prevents the springs moving more than a certain distance away from the contacts.

3. *The Commutator C.*—The commutator comes next under our consideration. This is a most important accessory, and fulfils two functions.

(1.) The cutting off of the current from the instrument when not actually in use.

(2.) The changing of the two magnet circuits through the disjunctor above described, so that either spring or contact may be in the circuit of either magnet, or *vice versâ*, the object of this being to check and be able to correct for any small error in the working of the disjunctor, such as dust in the contacts, unevenness in the power of the springs, &c., &c.

It consists of a horizontal board, with 12 holes in 3 rows of 4 each. Each of these holes contains mercury, and is in connection with a binding screw on the outside of the case. The four front screws are in connection with the central row of holes, and these are thus in direct connection with the two magnet circuits.

An insulated rocking arm, carrying four suitably-shaped pieces of copper, also insulated from each other, is placed immediately above

Digitized by Google

the central line of mercury contacts; and by moving this to the right or left by means of the lever arm and indicator outside the case, the central holes can be connected to those on either side, or by placing the lever in the centre disconnected from either.

To the terminals, L^1 L^1, are connected the line wires to the screen nearest the gun—those of the farther screen being connected to the terminals L^2 L^2. By removing the connecting straps, which are seen between L^1 and $-B$ (the negative pole of the battery), and also between L^1 and the other terminal, the line wires are quite disconnected from the rest of the instrument, and can be tested. The condition of the battery can be tested by the application of a voltmeter to the terminals $-B$ and $+B$.

In fig. 4 the circuit of the chronometer (upper magnet) is shown

Fig. 4.—Diagram of connections.

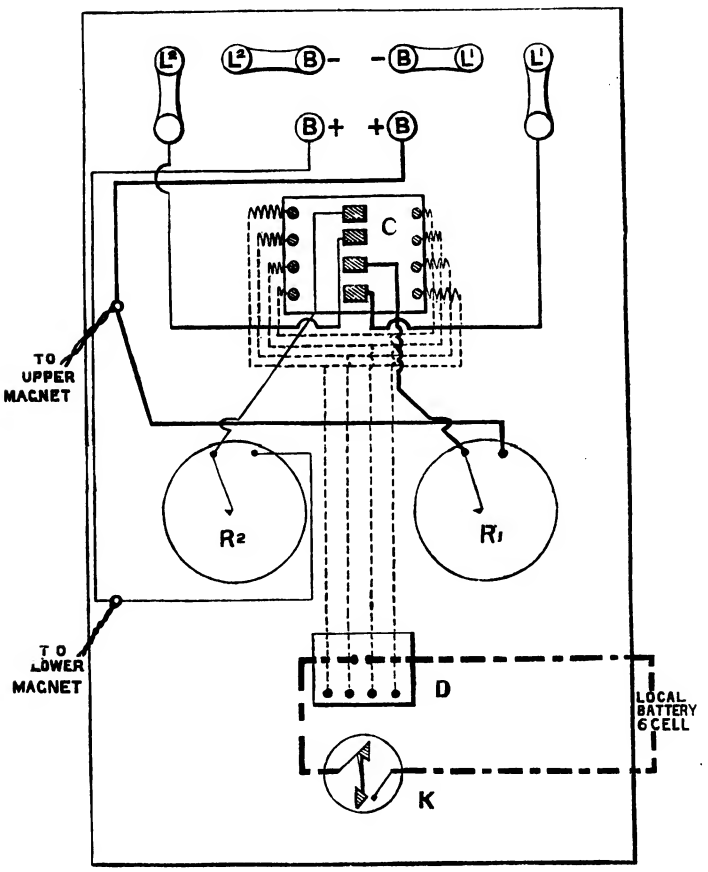

by a thick line, and that of the registrar (lower magnet) by a thin line.

The rheostats having both been set to zero, or their position of lowest resistance, the chronometer or registrar rods are hung up to their respective magnets, each having had in the first instance a small tubular weight slipped over them. The resistance of each circuit is

Digitized by Google

then gradually increased, the chronometer circuit first, till the rods fall. The tubular weights having then been taken off, it will be found that the magnets are just capable of sustaining their respective rods, and that they are necessarily, from the mode of adjustment adopted, of exactly the same power.

Having suspended both the rods again, the disjunctor now comes into play; when the first screen is broken the chronometer rod begins to fall; but this action is not instantaneous, as on the cessation of the electric current in the coils, supposing the latter were instantaneous (which it cannot be), the magnetism of the core has still to fall below a certain strength before the chronometer rod is eased, and, therefore, there is delay. A similar delay occurs in the release of the registrar rod; but in this case there are yet other effects to be taken into account. In the first place, the registrar rod falls some distance before it strikes the trigger table; then the trigger table has to release the spring and knife, and the latter has to move a certain distance before coming into contact with the chronometer rod.

The function of the disjunctor is to remove all these time errors mechanically. On pressing the disjunctor key both circuits are broken instantaneously and both rods fall simultaneously. The height up the chronometer rod where the mark is made when this action is performed forms the means of eliminating the time errors.

For the sake of convenience, the position of the disjunction line on the chronometer rod is made a fixed one, viz., 4·345 inches above the zero, equivalent to a time of fall of 0·15 of a second, from

$$h = 6g\ (0{\cdot}15)^2 = 4{\cdot}345 \text{ inches } (g = 32{\cdot}19).$$

and the disjunction mark made by the instrument is adjusted by raising or lowering the registrar magnet M^2 on the pillar, so as to coincide exactly with the mark previously made on the rod.

To check the disjunctor, all that is necessary is to repeat the above operation with the lever of the commutator on the opposite side. If the disjunctor is in correct adjustment, the two marks will be at the same height on the chronometer rod; if they are not, the disjunctor requires adjusting.

The records taken are not actually on the chronometer rod itself, but on a silvered copper tube, which fits it sufficiently tight so as not to slip about on it, and so change its position. Around this copper tube, which lasts some 50 rounds or more, a fine line is made at a height of 4·345 inches above the zero, by means of a special instrument for the purpose.

The chronograph instrument having now been adjusted, and the disjunctor line, as it is called, established correctly, the gun is fired, the projectile passes through the screens, and the chronometer and registrar rods fall one after the other. The chronometer rod having been taken out of the fall tube and examined, it will be found that the mark on the rod is made some distance above the disjunctor line, and the distance of this mark above zero is a measure of the time the projectile has taken to pass between the screens plus the time the registrar takes to fall and the knife takes to act.

The distance is measured carefully by means of a scale (see fig. 5) which can be applied to the rod. It consists of a metal bar with a hinged end carrying a conical plug which fits into a socket prepared for it at the lower end of the chronometer rod, and having a zero point coinciding exactly with that of the instrument with which it is

Digitized by Google

used; *i.e.*, with the point on the chronometer rod opposite to the knife when the rod is hung up. On the scale are two slides, either of which can be clamped with it. One is fitted with a micrometer screw, by which the other can be moved short distances for final adjustment of reading.

Fig. 5.

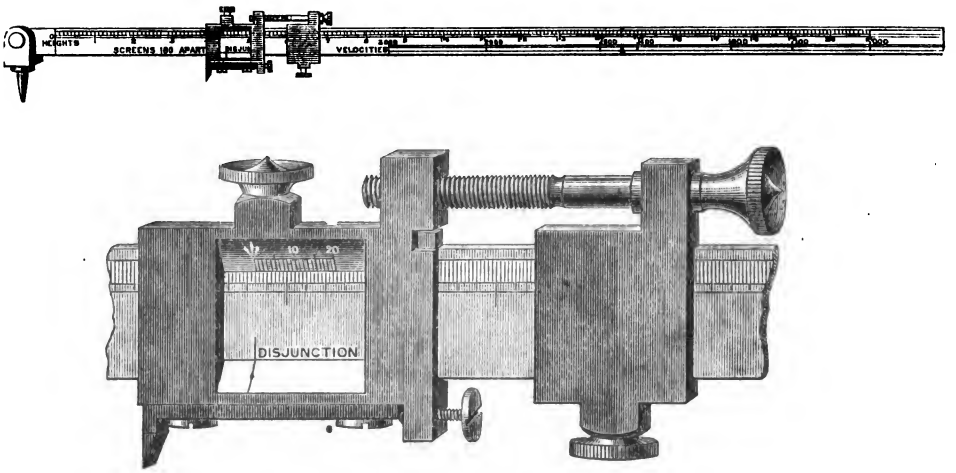

The scale is graduated on its upper edge in inches, and can be read to thousandths by means of a vernier; then, by measuring the distance of the mark up the rod from the zero of the scale, the time taken by the shot in traversing the distance between the screens can be calculated as follows:—

Let

T = time in seconds between the commencement of fall of the chronometer rod and the mark made on the rod.

t = actual time in seconds of the shot between screens, so that T$-t$ is the disjunctor time;

h = distance in inches from zero to mark on chronometer rod;

g = acceleration of gravity;

then, since h is measured in inches,

$$\frac{h}{12} = \tfrac{1}{2} g\mathrm{T}^2,$$

so that

$$h = 6g\mathrm{T}^2, \quad \mathrm{T} = \sqrt{\frac{h}{6g}}, \; t = \mathrm{T} - 0{\cdot}15,$$

so that

$$v = \frac{l}{\sqrt{\frac{h}{6g}} - 0{\cdot}15},$$

and $v = \dfrac{l}{t}$ is the average velocity between the screens, l feet apart.

As an example, suppose the mark made on the chronometer rod was at 10·644 inches above the zero; putting $h = 10{\cdot}644$ in the above, gives T = 0·235 of a second.

Digitized by Google

Now from this we must deduct 0·15 of a second, the time taken for the registrar rod, trigger, and knife to act, giving $t = 0{\cdot}085$ of a second as the time taken to pass from one screen to the other.

Since the distance between the screens is 180 feet, the mean velocity must be

$$\frac{180}{0{\cdot}085} = 2118 \text{ f/s.}$$

This is assumed to be the *actual* velocity at the middle point, and when the resistance varies with the cube of the velocity it is absolutely true; even when the velocity is such that the resistance varies with some other power, the difference would not be practically appreciable when the distance considered is so short as 180 feet.

The lower edge of the scale being graduated in velocities, these can be read off directly, thus saving calculation.

With screens placed 180 feet apart, and time to the disjunctor mark fixed at 0·15 of a second, the formula required for graduating the velocity scale is

$$h = 6g\left(\frac{180}{v} + 0{\cdot}15\right)^2.$$

Putting $v = 1000$ f/s gives $h = 21{\cdot}033$ inches,
and $v = 2000$,, ,, $h = 11{\cdot}125$,,

And to obtain the muzzle velocity V use is made of the formula

$$S_V = S_v + \frac{s}{C}.$$

EXAMPLE 1—SERVICE PROJECTILE.

Suppose a 6-inch Q.F. gun to have been fired with a 100-lb. projectile of service pattern at 60 yards from the first screen, then the distance s from the muzzle to the middle point between the screens where the velocity $v = 2118$ f/s. has been observed by means of the chronograph, is $180 + 90 = 270$ feet, and $C = \frac{w}{d^2} = 2{\cdot}778$. Then

$$\begin{aligned} S_V &= S_{2118} + \frac{270}{2{\cdot}778} \\ &= 45616{\cdot}2 + 97{\cdot}2 \\ &= 45713{\cdot}4 \\ V &= 2148 \text{ f/s.} \end{aligned}$$

EXAMPLE 2—PROOF PROJECTILE.

At the Proof Butts projectiles of the same weight as the service projectile, but with flat heads, are used, and supposing the same middle point velocity v as in (1) to have been observed, but a proof shot to have been fired.

On account of the flat head, the factor $\kappa = 2$ is introduced, and

$$C = \frac{w}{\kappa d^2} = \frac{100}{2 \times 36} = 1{\cdot}389.$$

Digitized by Google

The coefficience of shape is commonly taken as $\kappa = 2$, but 1·8 is better for flat-headed projectiles (p. 29).

Now
$$\frac{S}{C} = 194{\cdot}4,$$
$$S_v = 45810{\cdot}6,$$
$$V = 2178 \text{ f/s}.$$

Before the adoption of electricity, the instrument employed for determining the velocity of shot was the ballistic pendulum, invented by Benjamin Robins in 1740.

This consists essentially of a large pendulum provided with an iron plate or a box filled with sand; the bullet strikes the plate and is shattered, or else the cannon ball is imbedded in the box of sand; and now the *diluted* velocity of the ball and pendulum causes the pendulum to swing back through a certain angle from which the striking velocity of the ball is inferred.

Fig. 6.—Musket Pendulum for Small Arms.

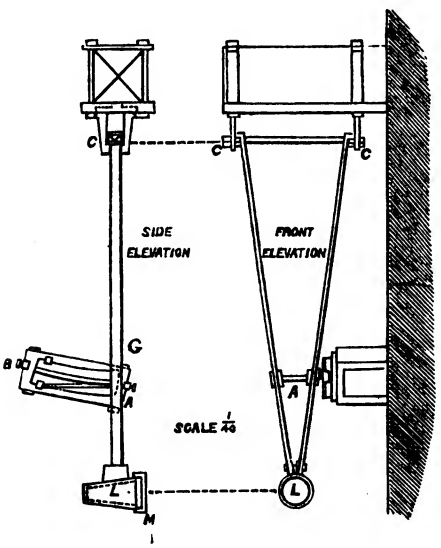

The musket pendulum is shown in fig. 6; and when, as here, the pendulum consists of a rigid framework, swinging bodily about the axis of suspension, it is important that the bullet should strike at or near a certain point called the centre of percussion, to minimise the shock on the axis of suspension.

The theoretical determination of this centre of percussion depends upon advanced dynamical considerations, although the position can be determined experimentally with great ease by noting the point where a plummet, suspended from the same axis, swings in the same period, and has no tendency to separate from the pendulum.

To avoid, however, all considerations of this centre of percussion, the rigid framework of the pendulum may be supposed replaced by five chains or cords, fig. 7, in accordance with Mr. Mallock's arrangement; and now if the box of sand or the block is struck by the ball

Digitized by Google

in a line passing horizontally through the centre of gravity or near it, the box will recoil, without rotation, through a certain height h feet, such that

$$h = \frac{U^2}{2g},$$

if the box and imbedded ball acquire a common velocity U f/s during the penetration.

FIG. 7.

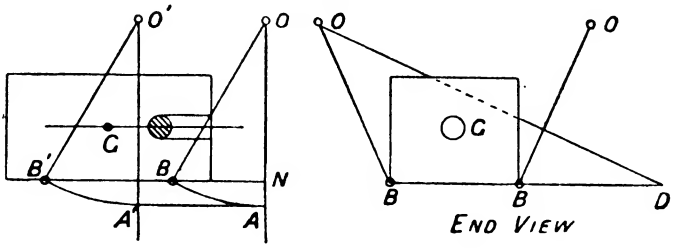

If the ball, weighing w lbs., strikes with velocity V f/s, and is imbedded in the box weighing W lbs., then the velocity of the ball is *diluted* from V to U, such that

$$wV = (W + w)U,$$

in accordance with the principle of momentum; and thence

$$V = \frac{W + w}{w}\sqrt{(2gh)}.$$

If a point A on the box in recoiling draws out a tape to a length c, the chord of the circular arc AB described by the point A, and if the chains or cords are l feet long, so that the radius of the circular arc is l, then

$$c^2 = 2hl, \text{ because } AB^2 = \text{diameter} \times AN,$$

so that

$$V = \frac{W + w}{w}\sqrt{\frac{g}{l}} \cdot c = \left(\frac{W}{w} + 1\right)\frac{2\pi c}{T},$$

where

$$T = 2\pi\sqrt{\frac{l}{g}},$$

is the time in seconds of a double swing of the pendulum or V is proportional to c, so that this tape can be graduated uniformly for equal increments of velocity.

The striking energy of the ball, $\frac{wV^2}{2g}$ ft.-lbs., is reduced by the impact to

$$(W + w)\frac{U^2}{2g} = \frac{w^2}{W + w}\frac{V^2}{2g} \text{ ft.-lb.},$$

shared between the block and the ball; so that

$$\frac{Ww}{W + w}\frac{V^2}{2g} \text{ ft.-lb.}$$

of energy is dissipated or liberated by the blow.

Digitized by Google

If we suppose this energy is used up in penetrating the sand of the box to a distance a feet against an average resistance of R pounds, then

$$Ra = \frac{Ww}{W + w} \frac{V^2}{2g} = \tfrac{1}{2}(W + w) \frac{W}{w} \frac{c^2}{l} \text{ ft.-lb.},$$

whence R can be determined from an observation of a.

If the shot occupies t seconds in penetrating the sand, then Rt = momentum in second-pounds lost by shot or gained by box,

$$Rt = w \frac{V - U}{g} = W \frac{U}{g},$$

so that

$$t = \frac{w}{W + w} \cdot \frac{2a}{c} \sqrt{\frac{l}{g}} = \frac{w}{W + w} \cdot \frac{a}{\pi c} T$$

seconds, during which the box will have moved with average velocity $\frac{1}{2}U$, and therefore through a distance

$$\frac{aW}{W + w} \text{ feet},$$

this distance is so small in practice that we are justified in ignoring the curvature in the motion as assumed above.

Thus, for example, if W = 2,000 lbs., L = 8 feet, c = 6 feet, and w = 20 lbs., then we find v = 1,212 f/s; and if the penetration of the shot into the sand is 2 feet, a = 2; and then the mean resistance R = 227,250 lbs., and the time of penetration about 0·0033 or 1 ÷ 300 of a second, during which the box will have moved about 0·2376 inch, say, one-quarter of an inch.

Sometimes the gun or rifle is mounted on a pendulum, thence called the gun pendulum; in this case the pendulum measures the recoil, as felt on the shoulder when the rifle is fired; for this purpose the rifle can be suspended by two cords about 3 or 4 feet long; but the additional recoil, due to the blast of powder, prevents the gun pendulum from giving direct record of the muzzle velocity of the shot, but in the small arm trade the average allowance is known from other experiments and allowed for. The ballistic pendulum is of much practical use in the small arm trade.

A bullet-proof steel cuirass illustrates in a popular manner the principle of the ballistic pendulum.

If the cuirass weighed, for instance, 12 lbs., and was struck by a ½-oz. bullet with velocity 2,000 f/s, it would deliver a blow to the body as if let fall about 5 inches; this is about the same blow as is felt on the shoulder when firing the rifle, supposed of the same weight 12 lbs.

SECTION III.—RECOIL.

Consider a gun and carriage (either field, siege, or garrison) as one system. On firing, a resultant force acts along the axis of the piece and tends to produce two kinds of motion.

(1.) Motion of translation of the centre of gravity of the system.

(2.) Rotation round the centre of gravity of the system, or some fixed point, the spade for instance in a field gun.

Digitized by Google

We can consider these tendencies to motion separately.

(1.) The tendency to motion of the centre of gravity of the system produced by the act of firing can be resolved—

(*a*) Vertically, and
(*b*) parallel to the ground or platform.

The first of these tendencies causes a stress in the axletree, and eventually a downward thrust on the wheels of a field carriage.

A downward blow is also produced on the sides of a garrison carriage and on the slide. This downward blow is very destructive at high angles of elevation.

The component parallel to the ground is the more considerable and causes the motion of recoil, which is checked by various means.

This force produces a horizontal stress on the axletree of a field carriage. Tensile stays transfer the pull from near the middle to parts nearer to its points of support.

The form of axletree which appears to be best fitted to resist these various stresses is one which is circular in section, lightness being obtained by the uses of tubular steel.

In modern gun carriages the gun is allowed to recoil some distance in a cradle, the movement being controlled by a hydraulic buffer. This movement of the gun reduces very much the stress on the carriage, so that in a field gun the wheels need not move on the ground.

The equation connecting the velocity of recoiling parts and the velocity of shot at any time whilst the shot is in the bore will be shown. The actual recoil of the gun whilst the shot is in the bore is very small.

Fig. 1 represents the bore of a gun at the moment of firing and also the same gun t seconds after firing, while the shot is still in the bore.

G_0 is the centre of the powder chamber of length l'; x is the distance recoiled by the gun, and y is the space through which the shot has moved along the bore, all three being in the same units.

G_1 is the centre point of the volume occupied by the gas (assumed of uniform density) t seconds after firing, therefore

$$A_1G_1 = \tfrac{1}{2}(x + l' + y).$$

The space passed over in t seconds by the mid point of the charge is

$$\tfrac{1}{2}(x + l' + y) - \left(x + \frac{l'}{2}\right) = \frac{y - x}{2}.$$

The backward velocity of the gun is $u = \dfrac{dx}{dt}$.

„ forward „ „ shot is $v = \dfrac{dy}{dt}$.

The forward velocity of the mid point of the charge is

$$\frac{d\,\frac{1}{2}(y - x)}{dt} = \frac{u - v}{2} \quad \ldots\ldots\ldots \quad (1).$$

By actual experiment on the laws of Motion.

Digitized by Google

Fig 1.

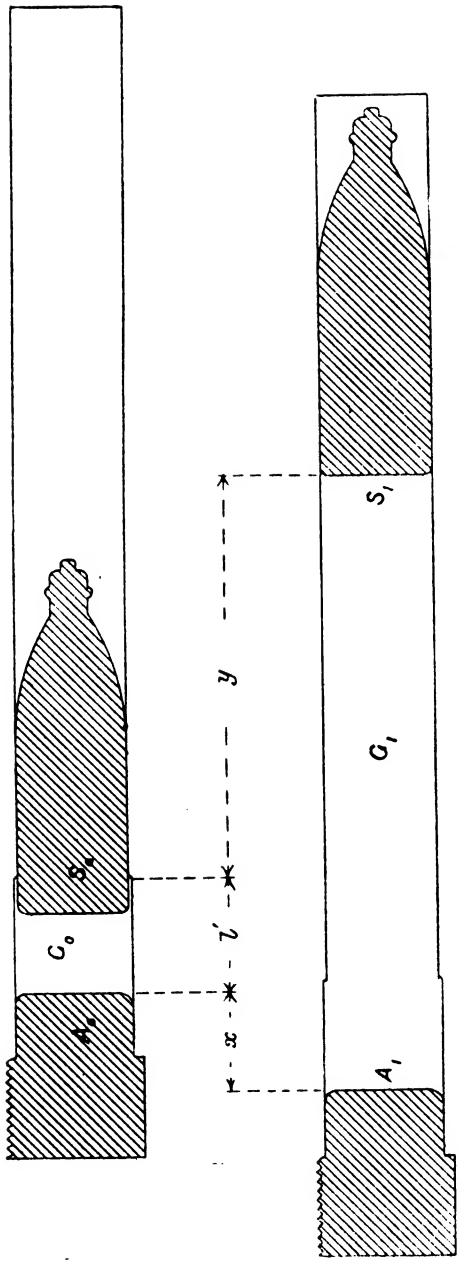

F lbs. (or tons) acting on W lbs. (or tons) gives a velocity of

$$\frac{F}{W} g \text{ f/s in 1 second,}$$

$$2\frac{F}{W} g \text{ f/s in 2 seconds,}$$

Digitized by Google

$$3\frac{F}{W}g \text{ f/s in 3 seconds,}$$

$$t\frac{F}{W}g \text{ f/s in } t \quad ,,$$

so that the velocity v f/s acquired in t seconds is

$$v = t\frac{F}{W}g = \frac{F}{W}gt,$$

or

$$W\frac{v}{g} = Ft.$$

This gives us the momentum equation, or the momentum generated by a force F lbs. (or tons) acting on W lbs. (or tons) for t seconds.

This equation is at once got from the second law of motion $\frac{F}{W} = \frac{f}{g}$, where f is the acceleration and $f = \frac{v}{t}$, so that we have again $W\frac{v}{g} = Ft$.

Since the acceleration is uniform, therefore the average velocity $\frac{s}{t} = \frac{0+v}{2} = \frac{v}{2}$, where s feet is the distance passed over by W, whilst the force F acts for t seconds.

Hence we have

$$W\frac{v}{g} = Ft \quad \text{and} \quad \frac{s}{t} = \frac{v}{2},$$

so that

$$W\frac{v^2}{2g} = Fs.$$

This is the energy equation, and states that the work done is $W\frac{v^2}{2g}$, being equal to the distance through which W lbs. (or tons) is moved by a force F lbs. (or tons).

Let the

Backward thrust of gas on base of bore be X lb.,
Forward ,, ,, ,, shot be Y lb.
The resultant thrust forward on the gas is X − Y lb.

Then w, W, P lbs. denoting the weights of shot, gun and charge,

$$Xt = W \cdot \frac{u}{g},$$

$$Yt = w\frac{v}{g},$$

$$(X - Y)t = P\frac{\frac{1}{2}(v-u)}{g} \text{ from (1),}$$

so that

$$W\frac{u}{g} - w\frac{v}{g} = P\frac{\frac{1}{2}(v-u)}{g},$$

or

$$(W + \tfrac{1}{2}P)u = (w + \tfrac{1}{2}P)v \quad \ldots\ldots\ldots \quad (2),$$

anywhere along the bore.

Digitized by Google

Also

$$(W + \tfrac{1}{2}P)x = (w + \tfrac{1}{2}P)y \quad . \quad . \quad . \quad . \quad . \quad . \quad (3),$$

$$x = \frac{w + \frac{1}{2}P}{W + w + P}(x + y) \quad . \quad . \quad . \quad . \quad . \quad . \quad (4),$$

$$y = \frac{w + \frac{1}{2}P}{W + w + P}(x + y) \quad . \quad . \quad . \quad . \quad . \quad . \quad (5).$$

At the muzzle $x + y = l$, the length of the rifled part of the bore, so that

$$t = \frac{l}{\frac{1}{2}(V + U)} = \frac{W + \frac{1}{2}P}{W + w + P} \cdot \frac{l}{\frac{1}{2}V} \quad . \quad . \quad . \quad . \quad (6),$$

where V is the muzzle velocity of shot, and U the velocity of recoil when the shot has reached muzzle, so that t is practically $\frac{l}{\frac{1}{2}V}$.

Again

$$Xx = W\frac{v^2}{2g} \text{ ft.-lb.},$$

$$Yy = w\frac{v^2}{2g} \text{ ft.-lb.},$$

anywhere up the bore, so that at the muzzle

$$X\frac{w + \frac{1}{2}P}{W + w + P}l = W\frac{U^2}{2g},$$

$$Y\frac{W + \frac{1}{2}P}{W + w + P}l = w\frac{V^2}{2g},$$

or

$$X = \frac{W + w + P}{w + \frac{1}{2}P}W \cdot \frac{U^2}{2gl} \quad . \quad . \quad . \quad . \quad . \quad . \quad (7),$$

$$Y = \frac{W + w + P}{W + \frac{1}{2}P}w \cdot \frac{V^2}{2gl} \quad . \quad . \quad . \quad . \quad . \quad . \quad (8).$$

It is found practically that the gun and carriage have moved only a very short distance when the projectile has just left the muzzle; and that the maximum velocity of recoil is not attained till a short time afterwards.

For after the shot has left the muzzle the powder gases escape with some unknown high velocity and mingle with the surrounding air, imparting to it a considerable momentum.

Meanwhile the pressure on the base of the bore must last for an appreciable time longer, so that the gun receives an additional recoil after the shot has left the muzzle; and this recoil is greater as the weight of the charge and the powder pressure up to the muzzle is greater.

To allow for this in practice, the empirical formula which is now used for calculating the velocity of recoil is—

$$WU = (w + CP)V \quad . \quad . \quad . \quad . \quad . \quad . \quad . \quad (9),$$

where C is a constant determined by experiment.

Digitized by Google

The value of C is usually taken at from 1·5 to 2, according to the nature of the powder.

From formula (7),

$$\frac{\text{The velocity of the shot}}{\text{,, ,, gun}} = \frac{V}{U} = \frac{W}{w + CP} = \frac{W}{w} \text{ approximately;}$$

$$\frac{\text{the momentum of the shot}}{\text{,, ,, gun}} = \frac{wV}{WU} = \frac{wW}{wW + CWP} = 1 \text{ approximately;}$$

$$\frac{\text{the energy of the shot}}{\text{,, ,, gun}} = \frac{wV^2}{WU^2} = \frac{w}{W}\left(\frac{W}{w + CP}\right)^2 = \frac{W}{w} \text{ approximately,}$$

so that the energy of recoil diminishes as the weight of the gun and carriage is increased.

In the modern systems of field artillery the gun has a long recoil in its cradle, and the wheels and trail are required to remain stationary on the ground. The gun is brought up in its recoil on cradle by a hydraulic buffer, and is run out again automatically by the resilience spiral springs.

In this way the carriage does not jump about on the ground, the gun layer can be seated on the carriage under the protection of a shield, and with his sights and elevating gear fixed to the cradle is independent of recoil, and can follow up a target continuously.

During recoil, the gun (fig. 2) exerts a pressure on the carriage which we will call R; suppose the gun to be firing point blank on

Fig. 2.

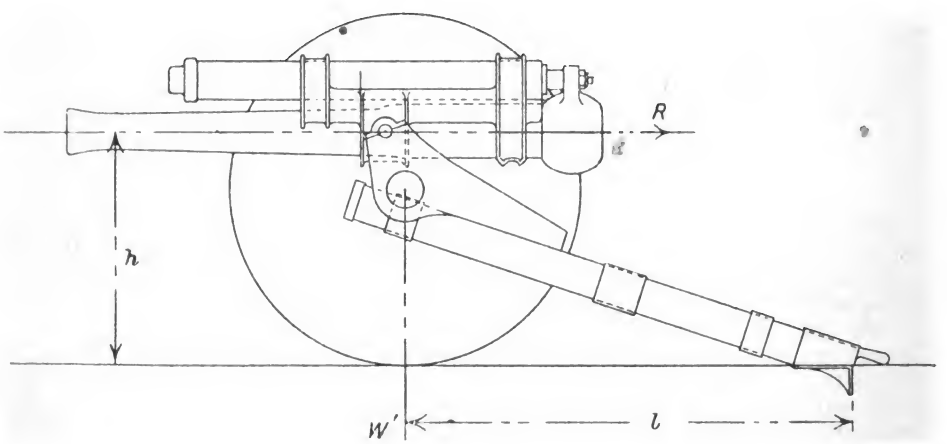

level ground, and that the height of the axis of the gun is h feet above the ground line, then the lifting moment round the end of the trail is

$$R \times h.$$

Opposing this is $W' \times l$, where W' is the weight on the wheels and l is the distance on ground from the wheels to the point of trail.

To prevent the wheels from jumping, it is necessary that any time

Digitized by Google

during recoil the *lifting* moment shall not exceed the stability moment, so that

$$R \cdot h < W' \cdot l,$$

and, in the limiting case

$$Rh = W'l \quad . \quad . \quad . \quad . \quad . \quad . \quad . \quad . \quad (10).$$

To prevent jump of wheels, therefore, we can either—

(*a*) Increase the weight of carriage;
(*b*) Reduce the height of the gun from the ground;
(*c*) Increase the length of the trail, keeping the centre of gravity as far forward as possible;
(*d*) Reduce the reaction R on the carriage;

Method (*d*) is the most suitable one.

The recoiling gun has acquired a certain amount of energy. The duty of the buffer is to absorb this energy with as little shock as possible.

From equation (9)

$$WU = (w + CP)V,$$

from which the velocity of recoil U is obtained.

W = weight of recoiling parts in lbs.
w = ,, shot in lbs.
V = muzzle velocity of shot in f/s.
P = weight of charge in lbs.
C is generally 2.

From the above equation, it is seen that if w, P, and V are fixed, then by increasing W we decrease U; so that the greater the weight of the recoiling parts the less the velocity of recoil; in the 13 and 18-pr. Q F. guns, the buffer cylinder recoils with the gun, and so adds to the weight of the recoiling parts.

The energy of recoil is

$$W \frac{U^2}{2g} = R_1 S;$$

where

R_1 is the average resistance of the buffer in lbs.
S is the length of recoil in feet.

It is seen therefore from this equation that by increasing S, we can decrease R_1. The maximum resistance R does not vary much from R_1.

The action of a long recoil gun on firing is as follows:—

The gun recoils through the cradle, drawing with it the buffer cylinder and compressing the springs. The oil passes from front to rear of the piston round it, the clearance afforded by the grooves being such as to offer the required hydraulic resistance. This is so arranged that the pull on the piston rod is never sufficient to cause the carriage to lift about the point of the trail. As the gun recoils, the centre of gravity of the whole gun and carriage becomes displaced to the rear, thereby lessening the actual weight on the wheels and increasing that on the trail; consequently, as W′ decreases (see formula 10), the stability moment decreases. In order to preserve the stability of the carriage, the lifting moment must be decreased, and this can only be done by lessening the resistance of the piston.

Digitized by Google

Looking at the subjoined diagram (fig. 3) the horizontal distance from left to right represents the travel of the gun during recoil, while the vertical heights represent the buffer pressure and therefore the pull of the piston rod. The dotted curve represents roughly the pressure line of a buffer with uniform clearance; the chain dot line

Fig. 3.

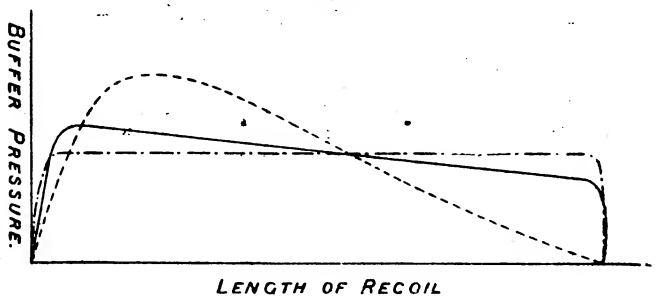

that of a buffer with uniform resistance; and the plain line that of the buffer required for a field carriage. The area enclosed by each curve will therefore represent the work done by the buffer. Observe that all three areas are equal since the total of work is the same in each case, only differently distributed. In the above considerations all mention of the spring has been omitted for the sake of simplicity. In reality their pull has to be added to that of the buffer, and it is the combined pull that has to be regulated.

The limiting conditions for the stability of a carriage are given by

$$W'l = Rh \quad . \quad . \quad . \quad . \quad . \quad . \quad . \quad . \quad . \quad (11),$$

$$WU = (w + 2P)V \quad . \quad . \quad . \quad . \quad . \quad . \quad . \quad (12),$$

$$W\frac{U^2}{2g} = RS \quad . \quad . \quad . \quad . \quad . \quad . \quad . \quad . \quad . \quad (13),$$

where W' = weight on wheels with gun run up.

These equations are laid down for the gun at 0° elevation, since, if the carriage has sufficient stability at that elevation, it will have greater stability at all positive elevations.

For a long recoil fixed carriage, Mr. A. G. Hadcock, late R.A., gives the following solution to the question:—

Is the stability of the carriage affected by the position of the recoil cylinder?

The force of recoil of the gun, &c., is

$$R = W\frac{U}{gt} \quad . \quad . \quad . \quad . \quad . \quad . \quad . \quad . \quad . \quad (14),$$

and the pull on the buffer

$$= W\frac{U^2}{2gs} \quad . \quad . \quad . \quad . \quad . \quad . \quad . \quad . \quad . \quad (15).$$

We may assume that, as U varies from a maximum U to zero at the end of recoil of S feet, the mean recoil velocity is $\frac{U}{2}$.

$$\therefore \frac{U}{2}t = S \quad \text{or} \quad \frac{U^2}{2S} = \frac{U}{t} \quad . \quad . \quad . \quad . \quad . \quad . \quad (16).$$

Digitized by Google

The pull on the buffer therefore equals R.

In fig. 4 the buffer cylinder is above the gun, and in fig. 5 it is below the gun.

In both cases, take moments about A, we have the pull of the buffer about AC, and a couple of moment R, BC and W′ varies as the gun recoils.

Fig. 4.

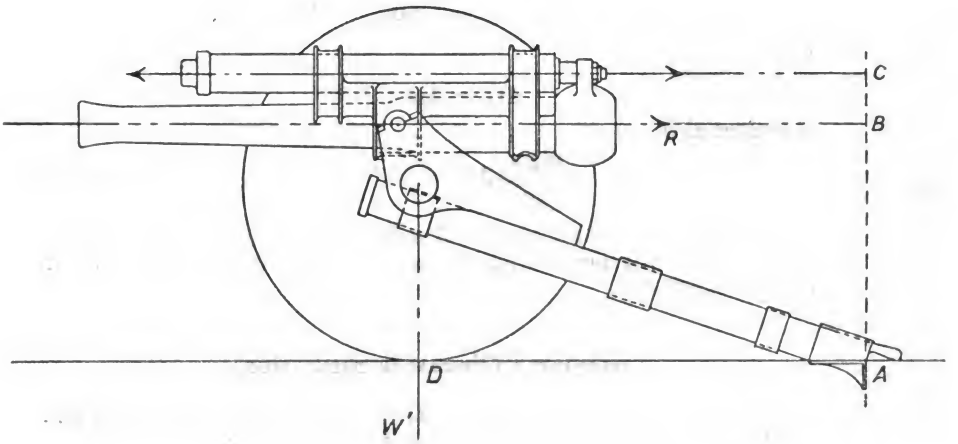

Fig. 5.

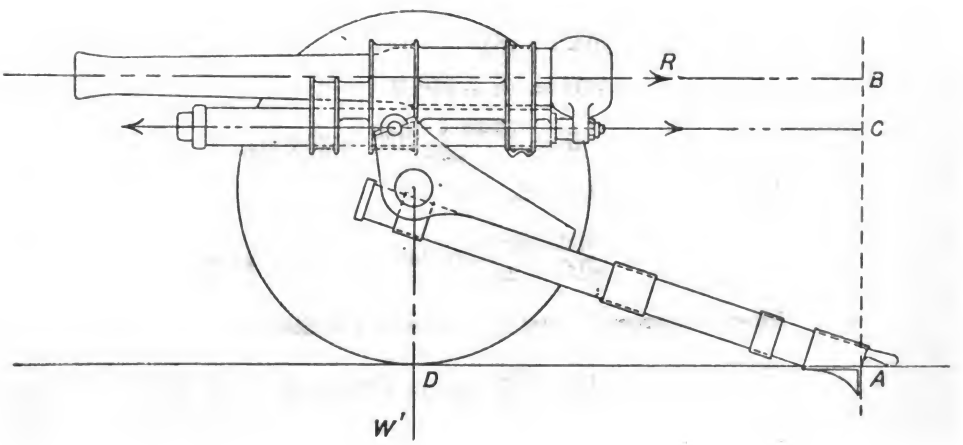

From fig. 4 and equations (14), (15),

$$\frac{WU^2}{2gS}(AC) - \frac{W}{g}\cdot\frac{U}{t}(BC) = W'.(AD),$$

Digitized by Google

therefore from (16)

$$\frac{WU^2}{2gS}(AB + BC) - \frac{W}{2g}\cdot\frac{U^2}{S}(BC) = W'.AD.$$

$$\therefore \frac{WU^2}{2gS}(AB) = W'.(AD) \quad . \quad . \quad . \quad . \quad (17);$$

from fig. 5 we have

$$\frac{WU^2}{2gS}(AC) + \frac{W}{g}\cdot\frac{U}{t}(BC) = W'(AD),$$

here

$$AC = AB - BC,$$

therefore also

$$\frac{WU^2}{2gS}(AB) = W'(AD) \quad . \quad . \quad . \quad . \quad . \quad . \quad (18).$$

This shows that the lifting tendency is independent of the position of the buffer and depends on the height of the axis of the gun and on the length AD.

EXAMPLE 1 (EHRHARDT FIELD GUN).

Find the minimum weight on the wheels of a long recoil gun carriage, which will keep the wheels steady, given

Weight of shot; $w = 14{\cdot}25$ lbs.; $h = 3{\cdot}28$ feet.
Weight of charge; $P = 1{\cdot}1$ lbs.; $l = 8{\cdot}2$ feet.
Weight of recoiling parts; $W = 882$ lbs.
Muzzle velocity; $V = 1640$ f/s.
Length of recoil 3·28 feet.

Equating momenta, see (8),

$$WU = (w + 2P)V$$

$$U = \frac{16{\cdot}45 \times 1640}{882} = 30{\cdot}6 \text{ f/s.}$$

Kinetic energy of gun is

$$\frac{882}{2240}\frac{(30{\cdot}6)^2}{2g} \text{ ft.-tons} = 5{\cdot}75 \text{ ft.-tons.}$$

Therefore average force of resistance of buffer is

$$R = \frac{5{\cdot}75}{3{\cdot}28} \text{ tons} = 1{\cdot}755 \text{ tons.}$$

The minimum weight, W', on the wheels to keep them from lifting is got from

$$W' \times 8{\cdot}2 = 1{\cdot}755 \times 3{\cdot}28$$

$$W' = \frac{5{\cdot}75}{8{\cdot}2} = 0{\cdot}7 \text{ ton} = 14 \text{ cwt.} = 1568 \text{ lbs.}$$

Digitized by Google

EXAMPLE 2.

For the 18-pr. Q.F.

W′, weight on wheels (gun in forward position) = 23 cwt. = 2576 lbs.
weight on trail = 120 lbs.
W, { weight of gun = 9 cwt.
{ weight of buffer cylinder = 40 lbs. $\therefore$ W = 1048 lbs.
h, height of axis of horizontal gun from ground = 36·86 inches.
l, distance along ground from wheel to point of trail = 9·15 inches.
w, weight of shot = 18·5 lbs.
P, weight of charge = $1\frac{7}{16}$ lbs.
V, the muzzle velocity = 1658 f/s.

The maximum recoil possible is S = 49 inches.

Find the minimum length of recoil allowable to keep the wheels steady.

In this example the weight of the springs in cylinder is left altogether out of account, also W′ is taken as 2576 throughout recoil.

We have to find S, the length of recoil.

$$WU = (w + 2P)\,V,$$

$$\therefore U = \frac{18{\cdot}5 + 2{\cdot}9}{1048}\,1658,$$

$$= 33{\cdot}86 \text{ f/s.}$$

Energy to be absorbed is

$$W\,\frac{U^2}{2g} = R \times S,$$

also

$$W' \times l = R \times h, \quad \text{or} \quad R = \frac{W''}{h}.$$

From these two equations, by eliminating R,

$$W\,\frac{U^2}{2g} = \frac{W' \times l}{h} \times S.$$

$$\therefore S = \frac{W}{W'} \cdot \frac{U^2}{2g} \cdot \frac{h}{l}$$

$$= \frac{1048 \times (33{\cdot}86)^2 \times 36{\cdot}86}{64 \times 2576 \times 91{\cdot}5} \text{ ft.}$$

$$= 2{\cdot}936 \text{ ft.}$$

$$= 35{\cdot}23 \text{ inches.}$$

Hence, since 49 inches of recoil is allowed, there is a margin on the side of stability of the carriage.

EXAMPLE 3.

In Example 2, the data are the same, except that the gun is in the most unfavourable position for stability; this is when it has recoiled its full length. In this case the weight on the wheels is 1972 lbs.; so that W′ = 1972.

Digitized by Google

Find the necessary recoil of the gun for stability.

As in Example 2,

$$U = 33{\cdot}86 \text{ f/s},$$

also

$$S = \frac{W}{W'} \cdot \frac{U^2}{2g} \cdot \frac{h}{l}$$

$$= \frac{1048 \times (33{\cdot}86)^2 \times 36{\cdot}86}{64 \times 1972 \times 91{\cdot}5} \text{ ft.}$$

$$= 3{\cdot}83 \text{ ft.}$$

$$= 45{\cdot}96 \text{ inches.}$$

It is seen from Examples 2 and 3 that 49 inches of recoil is ample for stability, even when the weight on the wheels is least.

If the springs are taken into account, the length of recoil calculated as necessary for stability will not be found to vary much.

EXAMPLE 4.

Taking the weight of the inner spring as 71 lbs. and the weight of the outer spring as 91 lbs.

Then if each spring is compressed to one-half its original length, and U f/s be the velocity of recoil, the velocity of recoil of the springs will be $\frac{3}{4}$U, $\frac{1}{4}$U respectively (see figs. 7, 8).

Taking these into account, the momentum equation becomes

$$(1048 + \tfrac{3}{4}.71 + \tfrac{1}{4}.91)\, U = (w + 2P)\, V.$$

The energy equation is

$$1043 \frac{U^2}{2g} + \frac{71\,(\frac{3}{4}U)^2}{2g} + 91 \frac{(\frac{1}{4}U)^2}{2g} = RS.$$

Find the value of S, the least recoil necessary for stability.

Answer 32·784 inches.

Fig. 7.

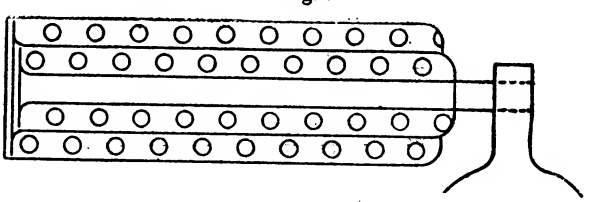

Springs before firing.

Fig. 8.

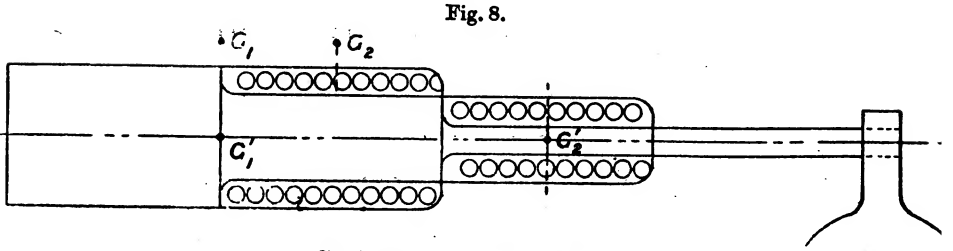

Springs at end of recoil.

Digitized by Google

CHAPTER V.
PRINCIPLES OF GUN CONSTRUCTION.

SECTION I.—STRESSES IN THE MATERIAL OF A GUN.

A GUN is essentially a thick tube, which is reinforced at any part according to the internal pressure to be expected there.

After the determination of the maximum pressure to be expected in the chamber of a gun and at various distances up the bore, the gunmaker is required to proportion the thickness of the metal of the gun so as to withstand the pressure with safety.

The theoretical problem is then the determination of the state of stress set up in the metal of a thick cylindrical tube, due to arbitrary internal and external pressure; and to determine this the tube is supposed cut in half by a diametral plane $r_1r_0Or_0r_1$, and the equilibrium of either half is considered.

The inch and ton are the units employed in practice, or else the centimetre and kilogramme in metric units.

Suppose then that the internal and external radii of the tube are r_0 and r_1 inches (cm.), and that the tube is subject to steadily applied internal and external pressures of p_0 and p_1 tons/in.^{2} [kg./cm.^{2} or atmospheres], see fig. 1.

Fig. 1.

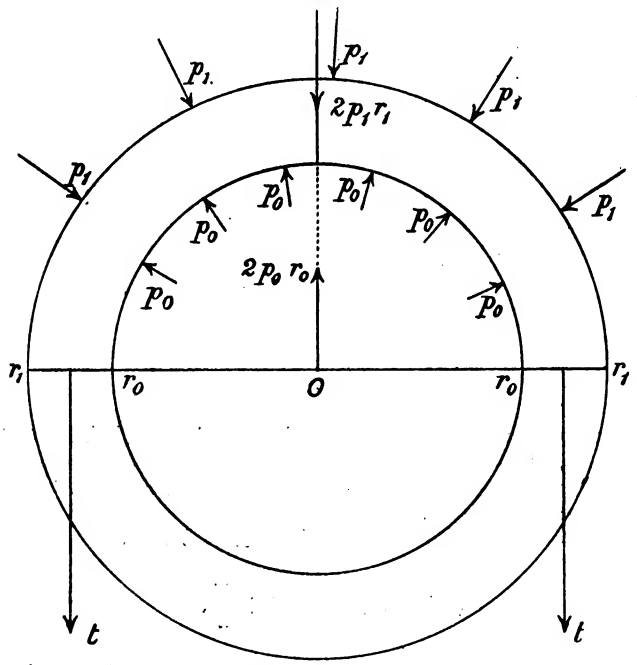

Considering an inch length of the tube, the hydrostatic thrust of the interior pressure p_0 over the interior semicircular surface is the same as the thrust across the diametral plane r_0Or_0, and is therefore $2r_0p_0$ tons; so also the thrust of the pressure p_1 over the exterior semicircle is $2r_1p_1$ tons, in the opposite direction.

Digitized by Google

And if X denote the pull in tons across each section of the tube, then the forces acting on the upper semicircle are $2p_0r_0$ in one direction and $2r_1p_1$, 2X in the opposite direction; these are in equilibrium.

$$\therefore 2X = 2p_0r_0 - 2p_1r_1,$$

or

$$X = p_0r_0 - p_1r_1.$$

Next to find the equations which connect the internal and external thrusts at any point in the tube with the pull or tension of the metal at the same place.

Fig. 2.

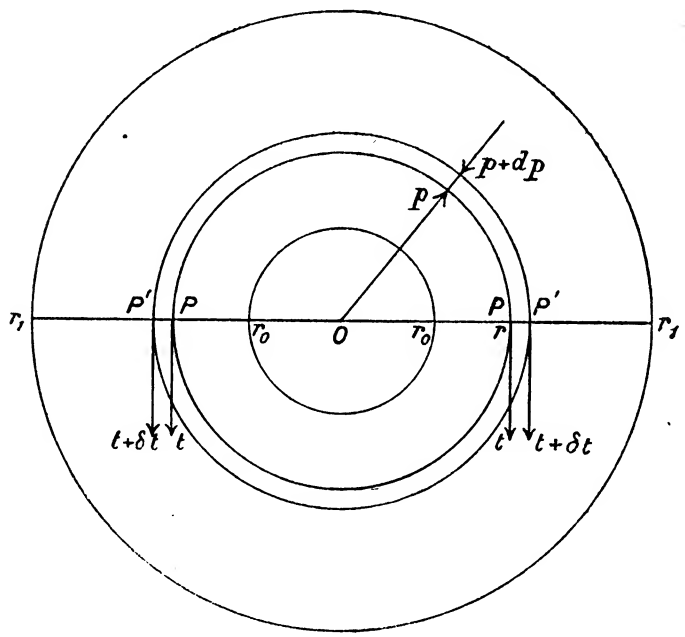

Take the very thin cylinder bounded by PP and P'P', let OP = r, OP' = $r + \delta r$, so that δr is v small. Let the internal pressure be p and the external $p + \delta p$, so also let the tension at P be t tons/in.^{2}, and at P', $(t + \delta t)$ tons/in.^{2}

Then PP' = δr, and the mean tension across PP' is

$$\tfrac{1}{2}(t + t + dt) = t + \frac{\delta t}{2},$$

and this acts on an area of δr square inches; hence the total pull is twice

$$\left(t + \frac{\delta t}{2}\right)\delta r, \text{ i.e., } = 2\left(t + \frac{\delta t}{2}\right)\delta r.$$

Digitized by Google

Considering the equilibrium of the thin cylinder PP′ we have therefore

$$2pr = 2(p + \delta p)(r + \delta r) + 2\left(t + \frac{\delta t}{2}\right)\delta r$$

i.e.,

$$(p + t)\,\delta r + r\delta p = 0,$$

or

$$P + t = -r\frac{\delta p}{\delta r} \quad \ldots\ldots \quad (1).$$

In Part II. it is also shown that

$$t - p = \text{const.} = 2b, \text{ say} \quad \ldots\ldots \quad (II).$$

From Equations I and II, by very elementary calculus,

$$p = \frac{a}{r^2} - b \quad \ldots\ldots \quad (III),$$

$$t = \frac{a}{r^2} + b \quad \ldots\ldots \quad (IV),$$

where a and b are constants.

These two equations are fundamental to the whole subject; they give us the equations for the Barlow curves, and by means of III and IV we can find the pressures and tensions at any point in the tube of a gun as soon as the a, b are known.

In Part II a geometrical method of drawing these Barlow curves is shown.

EXAMPLE TO FIND a, b.

If the internal pressure p_0 of a tube be known and also the external pressure p_1, a and b are at once found.

The value p_0 holds good where $r = r_0$ in (III).

$$\therefore p_0 = \frac{a}{r_0^2} - b. \quad \text{So also } p_1 = \frac{a}{r_1^2} - b = 0 \text{ say,}$$

then

$$a\left(\frac{1}{r_0^2} - \frac{1}{r_1^2}\right) = p_0, \quad \text{since} \quad b = \frac{a}{r_1^2}$$

$$\left.\begin{aligned} \therefore a &= \frac{r_1^2 r_0^2}{r_1^2 - r_0^2} p_0 \\ b &= \frac{r_0^2}{r_1^2 - r_0^2} p_0 \end{aligned}\right\}$$

whence also

$$p = \frac{a}{r^2} - b,$$

or

$$p = p_0 \frac{r_0^2}{r_1^2 - r_0^2}\left(\frac{r_1^2}{r^2} - 1\right) = p_0 \frac{r_0^2}{r^2} \cdot \frac{r_1^2 - r^2}{r_1^2 - r_0^2} \quad \ldots \quad (V),$$

so

$$t = p_0 \frac{r_0^2}{r_1^2 - r_0^2}\left(\frac{r_1^2}{r^2} + 1\right) = p_0 \frac{r_0^2}{r^2} \cdot \frac{r_1^2 + r^2}{r_1^2 - r_0^2} \quad \ldots \quad (VI),$$

and this gives the pressure and tension at any point of a tube when p_0 is known and $p_1 = 0$.

Digitized by Google

The curves of pressure p and the tension t of a tube or cylinder are shown on fig. 3.

Fig. 3.

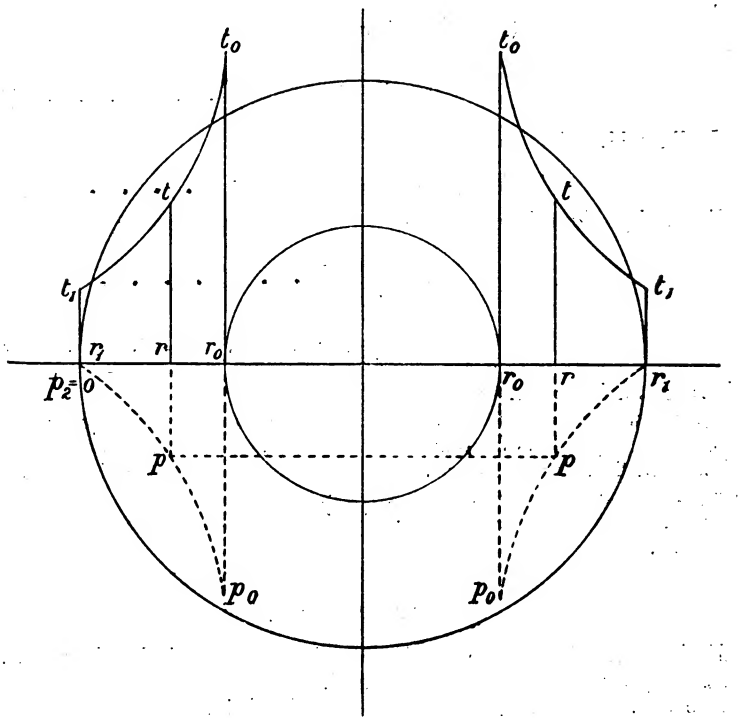

The curve of tension is got from $t = \frac{a}{r^2} + b$ and the ordinates t are drawn above and perpendicular to the diameter $r_1 r_0 O r_0 r_1$ (see fig. 3).

The curve of pressure is got from $p = \frac{a}{r^2} - b$ and the ordinates p are drawn below the diameter.

And the two curves are seen to be one a reflex of the other.

Also it is seen from the equations that a and b, being both positive, both t and p are greatest when r is least, *i.e.*, when $r = r_0$, and that they decrease as r increases and are least when r is greatest, *i.e.*, when $r = r_1$.

From p. 152, then, considering the equilibrium of the whole tube,

$$\text{area } t_0 r_0 r_1 t_1 \left[\text{or } \int_{r_0}^{r_1} t\, dr \right] = p_0 r_0 - p_1 r_1$$

$$= \text{area } r_0 p_0 p_0 r_0, \text{ since } p_1 = 0.$$

And for the equilibrium of any part, say that between r_0 and r, we have similarly

$$\text{area } t_0 r_0 r t \left[\text{or } \int_{r_0}^{r} t\, dr \right] = \text{rectangle } r_0 p_0 - \text{rectangle } rp.$$

Digitized by Google

When the thickness of the tube is small compared with the diameter, the maximum and minimum hoop tension differ only slightly from the average; so that this average need only be considered, as in the case of the cylindrical shell of a steam boiler.

In gun construction, however, the maximum hoop tension must be carefully considered, so as to keep it well below the elastic limit (p. 7); the shape of the curve of hoop tension $t_0 t t_1$ must therefore be determined, and at the same time the curve of radial pressure $p_0 p p_1$.

According to the rules laid down by the Ordnance Committee, the maximum allowable hoop tension is 18 tons/in.^{2} in a hoop or jacket, reduced to 15 tons/in.^{2} for an internal A tube, to allow for the diminution in strength due to rifling and erosion.

From fig. 3 we see that if the tube be unsupported by outside hoops, the tension t_0 at r_0 limits the pressure p_0 that the tube can stand on firing; suppose t_0 to be the working tenacity of the metal, then the fibre at r_0 is bearing the full strain, but the rest of the tube is bearing a strain which is smaller, and smaller than what it is capable of supporting; in other words, the metal of the tube could stand a good deal more strain if this were more evenly distributed.

The method adopted to secure this more even distribution of strain or hoop tensions is that of shrinking on outer tubes, so that each outer tube grips the inner one with a certain radial pressure.

Fig. 4.

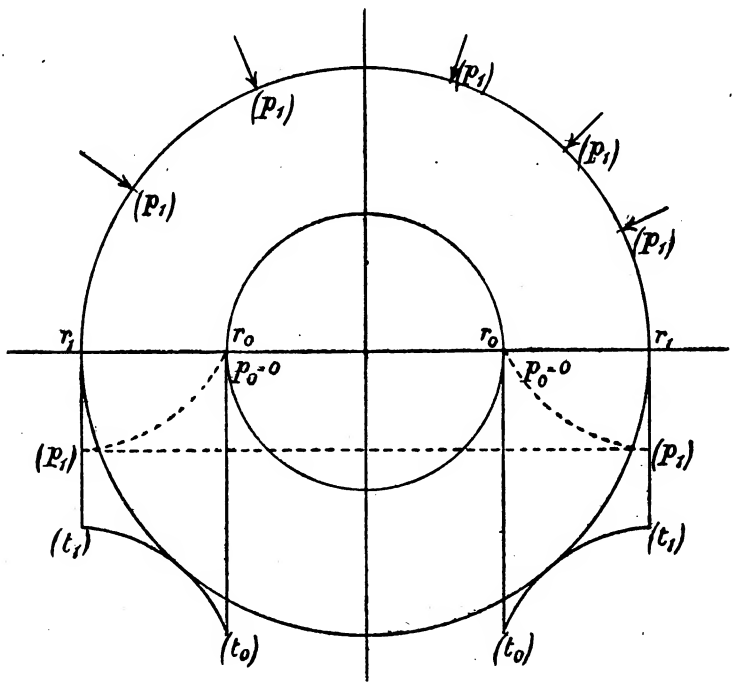

Due to the radial pressure p_1, the tensions between r_0 and r_1 are negative, that is, are compressions, and these are shown on the under side of $r_1 r_0 r_0 r_1$ to express diagrammatically the negative value.

Digitized by Google

Suppose now our tube were supported by such an outer tube, and that the radial pressure between the surfaces is (p_1) tons/in.^{2}. The effect of this on our tube will now be considered.

The pressures (p_1) act as shown at the circumference r_1r_1; to find the pressure and tension at any point r in the tube, see fig. 6.

From the fundamental equations (III), (IV),

$$(p_1) = \frac{a}{r_1^2} - b,$$

$$0 = (p_0) = \frac{a}{r_0^2} - b,$$

whence

$$\left.\begin{aligned} a &= -\frac{r_0^2 r_1^2}{r_1^2 - r_0^2}(p_1) \\ b &= -\frac{r_1^2}{r_1^2 - r_0^2}(p_1) \end{aligned}\right\} a, b \text{ are therefore both negative.}$$

At any point r

$$(t) = \frac{a}{r^2} + b$$

or

$$(t) = -\frac{r_1^2}{r^2}\cdot\frac{r^2 + r_0^2}{r_1^2 - r_0^2}(p_1) \quad . \quad \text{(VII)},$$

so

$$(p) = \frac{a}{r^2} - b \quad \text{or} \quad (p) = \frac{r_1^2}{r^2}\cdot\frac{r^2 - r_0^2}{r_1^2 - r_0^2}(p_1) \quad . \quad \text{(VIII)}.$$

It is seen that (t) must always be negative; this means that the effect of (p_1) is to create hoop compressions inside the tube, instead of tensions. (t), being negative, is drawn below $r_1 0 r_1$ in the direction opposite to the positive direction; it is also seen that (t) increases as r decreases, and that therefore the compression is greatest at r_0 and least at r_1 (see fig. 6).

Combining diagrams 5 and 6, we see that when a hoop is shrunk on the tube the original tensions t are greatly decreased, especially t_0; and that therefore a much greater powder pressure p_0 can be safely used.

An example showing this is now worked out.

Take the cross-section of the A tube of an early 4·7-inch gun at the cartridge chamber, where the bore is 5 inches in diameter and the thickness of metal 1·6 inches, so that $r_0 = 2{\cdot}5$; $r_1 = 4{\cdot}1$ inches.

We are limited by $t_0 = 15$ tons/in.^{2}

1st. Suppose the tube has an outer tube over it put on without shrinkage, merely a close mechanical fit, then $(p_1) = 0$, and (see fig. 6) from (VII) and (VIII)

$$(t) = 0, \quad (p) = 0.$$

2nd. Suppose the outer tube is shrunk on the inner one, so that it

Digitized by Google

grips it all round with a radial pressure (p_1) = 3 tons/in.^{2}, then the effect of this p_1 at r_0 and at r_1 is as follows:—

From (VII)

$$(t_0) = -\frac{r_1^2}{r_0^2}\cdot\frac{r_0^2 + r_0^2}{r_1^2 - r_0^2}3 = -9{\cdot}545,$$

$$(t_1) = -\frac{r_1^2}{r_1^2}\cdot\frac{r_1^2 + r_0^2}{r_1^2 - r_0^2}3 = -6{\cdot}55,$$

so that the original tensions at r_0 and r_1 on firing the gun get reduced by

9·545 and 6·55 tons/in.^{2},

and therefore a greater powder pressure can now be used.

In a gun consisting of a tube and a hoop which has been shrunk on it, let the firing pressure p_0 be such that the limits $t_0 = 15$, $t_1 = 18$ tons/in.^{2} are reached, then, considering the outer tube or hoop,

$$p_2 = 0 = \frac{a}{r_2^2} - b,$$

$$t_1 = 18 = \frac{a}{r_1^2} + b,$$

and

$$p_1 = \frac{a}{r_1^2} - b,$$

so that

$$p_1 - p_2 = a\left(\frac{1}{r_1^2} - \frac{1}{r_2^2}\right) = a\frac{r_2^2 - r_1^2}{r_1^2 r_2^2},$$

$$t_1 + p_2 = a\left(\frac{1}{r_1^2} + \frac{1}{r_2^2}\right) = a\frac{r_2^2 + r_1^2}{r_1^2 r_2^2},$$

$$\therefore\ p_1 - p_2 = \frac{r_2^2 - r_1^2}{r_2^2 + r_1^2}(t_1 + p_2),$$

or

$$p_1 = \frac{r_2^2 - r_1^2}{r_2^2 + r_1^2}(t_1 + p_2) + p_2 \quad \ldots\ldots \text{(IX)}.$$

In this case, since $p_2 = 0$, $t_1 = 18$,

$$p_1 = \frac{r_2^2 - r_1^2}{r_2^2 + r_1^2}18,$$

which gives the value of p_1, the radial pressure between the tube and the hoop.

Referring to IX, this is the gunmaker's formula. In its most general form this is

$$p_n = \frac{r^2_{n+1} - r_n^2}{r^2_{n+1} + r_n^2}(t_n + p_{n+1}) + p_{n+1} \text{ for the } (n+1)^{\text{th}} \text{ hoop (the outer hoop)},$$

this is derived from knowing t_n, p_{n+1};

Digitized by Google

$$t_n = \frac{a}{r_n^2} + b,$$

$$p_{n+1} = \frac{a}{r^2_{n+1}} - b,$$

$$p_n = \frac{a}{r_n^2} - b,$$

whence

$$p_n - p_{n+1} = \frac{a}{r_n^2 r^2_{n+1}}(r^2_{n+1} - r_n^2),$$

$$t_n + p_{n+1} = \frac{a}{r_n^2 r^2_{n+1}}(r^2_{n+1} + r_n^2),$$

$$\therefore \frac{p_n - p_{n+1}}{t_n + p_{n+1}} = \frac{r^2_{n+1} - r_n^2}{r^2_{n+1} + r_n^2},$$

$$p_n = \frac{r^2_{n+1} - r_n^2}{r^2_{n+1} + r_n^2}(t_n + p_{n+1}) + p_{n+1} \quad . \quad . \quad . \quad (X).$$

This formula is of great importance.

It is necessary to have distinguishing symbols for different stresses set up in a gun.

Powder stresses are those set up by the radial pressures of the powder gas throughout the mass of the gun, the symbols for these will be P, T.

The initial stresses are those set up by the shrinking on of one tube or hoop over another, the symbols for these are (p), (t).

The firing stresses are those which are created in the made up gun when the powder charge is fired, it is therefore made up of both the powder and the initial stresses ; the symbols for these are p, t.

So that

Firing stress = Powder stress + Initial stress.

Summing up, the symbols are

Powder stresses P, T.
Firing stresses p, t.
Initial stresses (p), (t).

Powder Stress.

In dealing with these, all consideration of the initial stresses in the completed gun is left alone, the problem then amounts to this :—

A pressure P_0 is applied at the interior of the tube. Let the gun consist of a tube and 3 hoops : what will be the radial pressure and circumferential tension produced at any part of the gun, due to the powder pressure P_0 ?

In dealing with this, the whole gun is considered as one homogeneous cylinder of internal radius r_0 and external radius r_3, as though the surfaces of separation between any two hoops did not exist. This holds good no matter how many hoops the gun may have.

Digitized by Google

Fig. 5.

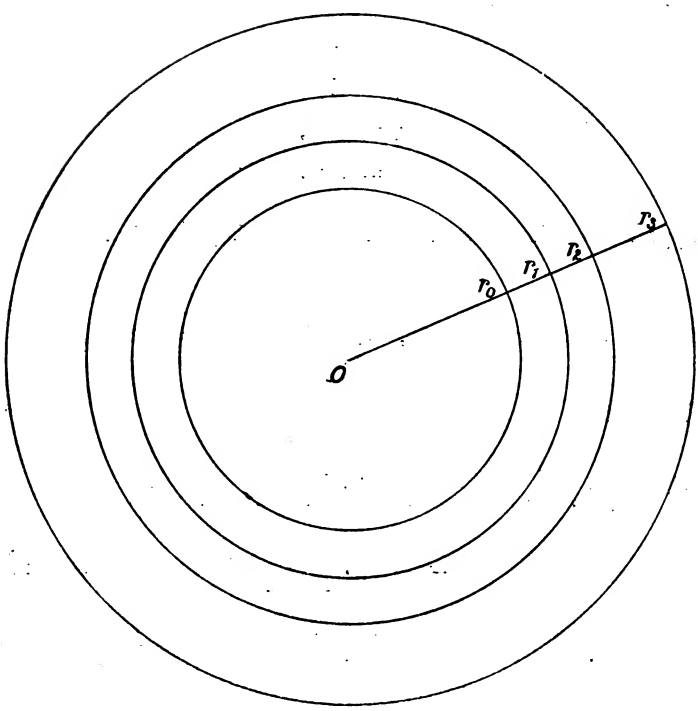

The data to start with are: P_0 is known, P_3 is zero, r_0, r_1, r_2, r_3 are known.

$$P_0 = \frac{a}{r_0^2} - b, \quad \text{whence} \quad a = \frac{r_3^2 r_0^2}{r_3^2 - r_0^2} P_0,$$

$$0 = P_3 = \frac{a}{r_3^2} - b, \qquad b = \frac{r_0^2}{r_3^2 - r_0^2} P_0.$$

Substituting these values of a and b in

$$P_r = \frac{a}{r^2} - b,$$

$$T_r = \frac{a}{r^2} + b,$$

we have

$$(P_r, \text{ or}) \; P = \frac{r_0^2}{r^2} \cdot \frac{r_3^2 - r^2}{r_3^2 - r_0^2} P_0 \quad . \quad . \quad . \quad . \quad (XI),$$

$$(T_r, \text{ or}) \; T = \frac{r_0^2}{r^2} \cdot \frac{r_3^2 + r^2}{r_3^2 - r_0^2} P_0 \quad . \quad . \quad . \quad . \quad (XII),$$

and from this we have at once the radial pressure and the circumferential tension at any distance.

Digitized by Google

As an example, take a 6-inch gun composed of an A tube, breech piece B and jacket C, where

$$r_0 = 4,$$
$$r_1 = 5{\cdot}6,$$
$$r_2 = 8{\cdot}7,$$
$$r_3 = 11{\cdot}8.$$

Suppose a powder pressure of 16 tons/in.^{2} is given, *i.e.*,

$$P_0 = 16.$$

Then, $r_0^2 = 16$, $r_1^2 = 31{\cdot}36$, $r_2^2 = 75{\cdot}69$, $r_3^2 = 139{\cdot}24$, and

$$P_0 = 16,$$

$$P_1 = \frac{r_0^2}{r_1^2} \cdot \frac{r_3^2 - r_1^2}{r_3^2 - r_0^2} 16 = \frac{16}{31{\cdot}36} \cdot \frac{139{\cdot}24 - 31{\cdot}36}{139{\cdot}24 - 16} 16$$

$$= \frac{16}{31{\cdot}36} \cdot \frac{107{\cdot}88}{123{\cdot}24} 16 = 7{\cdot}13 \text{ (by slide rule)},$$

$$= \frac{r_0^2}{r_2^2} \cdot \frac{r_3^2 - r_2^2}{r_3^2 - r_0^2} 16 = \frac{16}{75{\cdot}69} \cdot \frac{63{\cdot}55}{123{\cdot}24} 16 = 1{\cdot}745 \text{ (by slide rule)},$$

$$P_3 = \frac{r_0^2}{r_3^2} \cdot \frac{r_3^2 - r_3^2}{r_3^2 - r_0^2} 16 = 0.$$

$$T_0 = \frac{r_0^2}{r_0^2} \cdot \frac{r_3^2 + r_0^2}{r_3^2 - r_0^2} 16 = \frac{155{\cdot}24}{123{\cdot}24} 16 = 20{\cdot}14 \text{ (by slide rule)},$$

$$T_1 = \frac{16}{31{\cdot}36} \cdot \frac{170{\cdot}6}{123{\cdot}24} 16 = 11{\cdot}28 \quad ,,$$

$$T_2 = \frac{16}{75{\cdot}69} \cdot \frac{214{\cdot}93}{123{\cdot}24} 16 = 5{\cdot}9 \quad ,,$$

$$T_3 = \frac{16}{139{\cdot}24} \cdot \frac{2 \times 139{\cdot}24}{123{\cdot}24} 16 = \frac{16 \times 2 \times 16}{123{\cdot}24} = 4{\cdot}15 \quad ,,$$

In actually working these results, a good deal of labour can be saved by observing that

$$T - P = \left(\frac{a}{r^2} + b\right) - \left(\frac{a}{r^2} - b\right) = 2b,$$

so that the difference between the T and P at any point is constant and equal to $2b$.

$$\therefore T_0 - P_0 = T_1 - P_1 = T_2 - P_2 = T_3 - P_3 = 2b \quad . \text{ (XIII)}.$$

Digitized by Google

As soon as T_0 is found we get at once

$$T_0 - P_0 = 20{\cdot}14 - 16 = 4{\cdot}14 = 2b,$$

so that from (XIII)

$$T_1 = P_1 + 4{\cdot}14 = 7{\cdot}13 + 4{\cdot}14 = 11{\cdot}27,$$
$$T_2 = P_2 + 4{\cdot}14 = 1{\cdot}745 + 4{\cdot}14 = 5{\cdot}885,$$
$$T_3 = P_3 + 4{\cdot}14 = 4{\cdot}14.$$

The very slight differences in the two sets of values for T_1, T_2, T_3 are immaterial; going to one place of decimals, the results are

$P_0 = 16$	tons/in.^{2}	$T_0 = 20{\cdot}1$	tons/in.^{2}
$P_1 = 7{\cdot}1$	,,	$T_1 = 11{\cdot}3$	,,
$P_2 = 1.7$	,,	$T_2 = 5{\cdot}9$	,,
$P_3 = 0$	,,	$T_3 = 4{\cdot}1$	,,

Initial Stress (p), (t).

In these, and therefore also in the firing stresses (since they include the initial stresses), there is not a continuity of circumferential stress at the surfaces of separation between any two hoops, and the hoop tension can change suddenly.

Thus, suppose a gun made up of a tube and two hoops of radii $r_0 r_1 r_2 r_3$; call these three tubes A, B, and C.

Fig. 6.

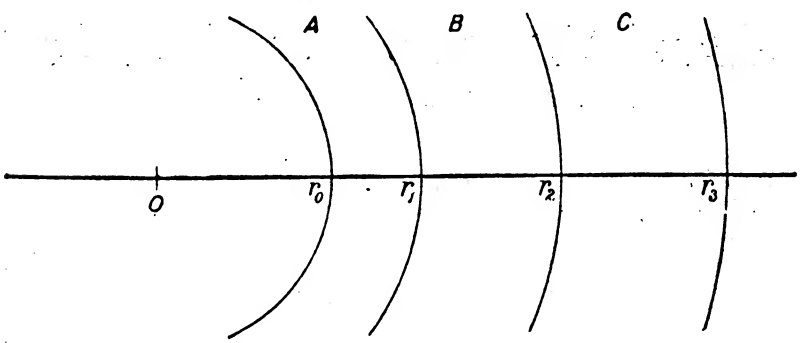

B and C are shrunk on and therefore in a state of repose of the gun,

At the surface of separation between B and C,

C is in tension circumferentially at r_2,

B is in compression circumferentially at r_2.

So that sudden changes of circumferential stress do occur at the surfaces of separation.

Digitized by Google

It is necessary to use different symbols for each surface between two hoops, as follows:—

(t_0), (t_1), (t_2), (t_3), (t_4), &c., for the inner surface of each hoop.
(t'_1), (t'_2), (t'_3), &c. „ outer „ „ „

Fig. 7.

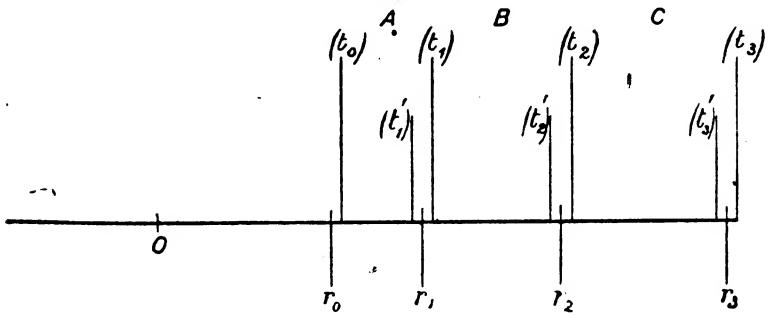

So that (t_0) and (t'_1) apply to tube A,
(t_1) „ (t'_2) „ „ B,
(t_2) „ (t'_3) „ „ C.

(t_3) is outside C and therefore does not enter with a gun of 3 tubes only.

Radially the pressure is the same at the surface of separation, so that there is no need of suffixed symbols for the radial stress.

Firing Stresses p, t.

Suppose the values r_0, r_1, r_2, r_3, &c. at any section of the bore or chamber of a gun are known, we have two limits assigned, viz.:—

Tension of material for inner tube is 15 tons/in.^{2},
„ „ „ outer tubes is 18 tons/in.^{2},

then to find the firing stresses at any part of the section in the various hoops, we start with the outer hoop of the gun, and working inwards are enabled to find the maximum pressure in the bore; this maximum pressure is our maximum powder pressure, and knowing this the various powder stresses are found.

Deducting the powder stresses from the firing stresses gives the initial stresses, and then the amount of shrinkage is calculated which will produce the required initial stresses.

The maximum allowable pressure p_0 inside the gun is theoretical. As a matter of precaution no gun is allowed to be subjected to the full amount calculated, the charges being so arranged that the pressure shall not exceed a normal chamber pressure varying from $\frac{2}{3}$ to $\frac{1}{2}$ of this p_0, so that under ordinary conditions the elastic limit of no part of the material may be reached, or permanent extension take place. Thus if it is found that $p_0 = 20$ tons/in.^{2}, the working pressure would vary from $20 \times \frac{2}{3}$ to $20 \times \frac{1}{2}$, *i.e.*, from 16 to 10 tons/in.^{2}, as the case may be.

Digitized by Google

This working pressure, or normal chamber pressure, is that pressure which should not be exceeded by the ordinary service charge, and in the case of cordite the temperature of the charge is fixed at 80° F. It might be called the specification pressure.

The actual pressure which a charge does produce, as ascertained by means of the crusher gauge and coppers, is frequently below the working pressure, and is dependent on such things as wear of the gun, temperature of charge, &c.

An example is now worked out.

In a 6-inch B.L. gun

$$r_0 = 4,$$
$$r_1 = 5{\cdot}6,$$
$$r_2 = 8{\cdot}7,$$
$$r_3 = 11{\cdot}8.$$

Find all the Firing, Powder, and Initial Stresses.

Starting with firing pressures,

$$t_0 = 15;\quad t_1 = 18;\quad t_2 = 18;$$

$$r_0^2 = 16,\quad r_1^2 = 31{\cdot}36,\quad r_2^2 = 75{\cdot}69,\quad r_3^2 = 139{\cdot}24.$$

Also $p_3 = 0$, hence for the outer tube,

$$t_2 = 18 = \frac{a}{r_2^2} + b,$$

$$p_3 = 0 = \frac{a}{r_3^2} - b.$$

Solving this, and making use of the gunmaker's formula (see p. 158)

$$p_2 = \frac{r_3^2 - r_2^2}{r_3^2 + r_2^2}(t_2 + p_3) + p_3.$$

So that, applying the formula for each tube or hoop,

$p_3 =$

$$p_2 = \frac{r_3^2 - r_2^2}{r_3^2 + r_2^2}(18 + 0) + 0 = \frac{63{\cdot}55}{214{\cdot}93}\,18 = 5{\cdot}32 \quad \text{(slide rule)}$$

$$p_1 = \frac{r_2^2 - r_1^2}{r_2^2 + r_1^2}(t_1 + p_2) + p_2 = \frac{44{\cdot}33}{107{\cdot}05}(18 + 5{\cdot}32) + 5{\cdot}32$$
$$= 9{\cdot}68 + 5{\cdot}32 = 15{\cdot}0$$

$$p_0 = \frac{r_1^2 - r_0^2}{r_1^2 + r_0^2}(t_0 + p_1) + p_1 = \frac{15{\cdot}36}{47{\cdot}36}(15 + 15) + 15$$
$$= 9{\cdot}74 + 15 = 24{\cdot}74.$$

The hoop tensions are found at once from formula

$$t'_n - p_n = t_{n-1} - p_{n-1}.$$

Digitized by Google

Since in the nth hoop

$$t'_n = \frac{a}{r_n^2} + b,$$

$$\therefore t'_n - p_n = 2b.$$

$$p_n = \frac{a}{r_n} - b,$$

also,

$$t_{n-1} = \frac{a}{r^2_{n-1}} + b,$$

$$\therefore t_{n-1} - p_{n-1} = 2b.$$

$$p_{n-1} = \frac{a}{r^2_{n-1}} - b,$$

Applying this, we have

$$\text{Jacket} \begin{cases} t'_3 = (t_2 - p_2) + p_3 = 18 - 5{\cdot}32 + 0 = 12{\cdot}68, \\ t_2 = 18, \end{cases}$$

$$\text{Breech-piece} \begin{cases} t'_2 = (t_1 - p_1) + p_2 = 18 - 15 + 5{\cdot}32 = 8{\cdot}32, \\ t_1 = 18, \end{cases}$$

$$\text{Tube} \begin{cases} t'_1 = (t_0 - p_0) + p_1 = 15 - 24{\cdot}74 + 15 = 5{\cdot}26, \\ t_0 = 15. \end{cases}$$

Powder Stress: P, T.

The maximum allowable pressure has been found to be 24·74 tons/in.^{2}, this therefore is the maximum powder pressure in the interior of the bore.

$$\therefore P_0 = 24{\cdot}74.$$

To obtain the powder stresses at other parts of the gun, we treat the whole gun as one homogeneous mass of internal radius r_0 and external radius r_3.

$$P_0 = 24{\cdot}74 = \frac{a}{r_0^2} - b,$$

$$P_3 = 0 = \frac{a}{r_3^2} - b,$$

at any point

$$P = \frac{a}{r^2} - b,$$

$$T = \frac{a}{r^2} + b,$$

and a, b are the same constants throughout tube, breech-piece, and jacket.

Solving the equations, we have

$$a = \frac{r_0^2 r_3^2}{r_3^2 - r_0^2} p_0; \quad b = \frac{r_0^2}{r_3^2 - r_0^2} p_0.$$

$$\therefore P = \frac{r_0^2}{r_3^2 - r_0^2}\left(\frac{r_3^2}{r^2} - 1\right) = \frac{r_0^2}{r^2} \cdot \frac{r_3^2 - r^2}{r_3^2 - r_0^2} p_0,$$

$$T = \frac{r_0^2}{r_3^2 - r_0^2}\left(\frac{r_3^2}{r^2} + 1\right) = \frac{r_0^2}{r^2} \cdot \frac{r_3^2 + r^2}{r_3^2 - r_0^2} p_0.$$

Digitized by Google

Digitized by Google

THE NEW YORK
PUBLIC LIBRARY

ASTOR, LENOX AND
TILDEN FOUNDATIONS.

Digitized by Google

$\therefore P_0 = 24{\cdot}74,$

$$P_1 = \frac{16}{31{\cdot}36} \cdot \frac{139{\cdot}24 - 31{\cdot}36}{139{\cdot}24 - 16} 24{\cdot}74 = \frac{16}{31{\cdot}36} \cdot \frac{107{\cdot}88}{123{\cdot}24} 24{\cdot}74 = 11{\cdot}1,$$

$$P_2 = \frac{16}{75{\cdot}69} \cdot \frac{139{\cdot}24 - 75{\cdot}69}{123{\cdot}24} 24{\cdot}74 = \frac{16}{75{\cdot}69} \cdot \frac{63{\cdot}55}{123{\cdot}24} 24{\cdot}74 = 2{\cdot}7,$$

$P_3 = 0.$

$$T_0 = \frac{16}{16} \cdot \frac{139{\cdot}24 + 16}{139{\cdot}24 - 16} \cdot 24{\cdot}74 = \frac{155{\cdot}24}{123{\cdot}24} 24{\cdot}74 = 31{\cdot}2,$$

$T_1 = (t_0 - p_0) + p_1 = 31{\cdot}2 - 24{\cdot}74 + 11{\cdot}1 = 17{\cdot}56,$

$T_2 = (t_0 - p_0) + p_2 = 6{\cdot}46 + 2{\cdot}7 = 9{\cdot}16,$

$T_3 = (t_0 - p_0) + p_3 = 6{\cdot}46.$

Initial Stress: (p), (t).

These are got by subtracting powder from firing stresses.

$(p_0) = p_0 - P_0 = 24{\cdot}74 - 24{\cdot}74 = 0,$

$(p_1) = p_1 - P_1 = 15 - 11{\cdot}1 = 3{\cdot}9,$

$(p_2) = p_2 - P_2 = 5{\cdot}32 - 2{\cdot}7 = 2{\cdot}62,$

$(p_3) = p_3 - P_3 = 0 - 0 = 0,$

Tube $\begin{cases} (t_0) = t_0 - T_0 = 15 - 31{\cdot}2 = -16{\cdot}2, \\ (t'_1) = t'_1 - T_1 = 5{\cdot}26 - 17{\cdot}56 = -12{\cdot}30, \end{cases}$

Breech-piece $\begin{cases} (t_1) = t_1 - T_1 = 18 - 17{\cdot}56 = 0{\cdot}44, \\ (t'_2) = t'_2 - T_2 = 8{\cdot}32 - 9{\cdot}16 = -0{\cdot}84. \end{cases}$

Jacket $\begin{cases} (t_2) = t_2 - T_2 = 18 - 9{\cdot}16 = 8{\cdot}84, \\ (t'_3) = t'_3 - T_3 = 12{\cdot}68 - 6{\cdot}46 = 6{\cdot}22. \end{cases}$

The figs. 8 and 9 show the various stresses for this 6-inch gun to one place of decimals. A similar procedure will apply for a gun built up of four or more parts.

Fig. 8.

Digitized by Google

Fig. 9.

A simple illustration of initial stress may be given by means of an india-rubber ring (fig. 10) of interior diameter *ab*, and a loose cardboard roll of greater diameter, *cd*. If the former is stretched, put over the latter, and left to itself, contraction of both will take place to some diameter *ef*, intermediate between *ab* and *cd*.

Fig. 10.

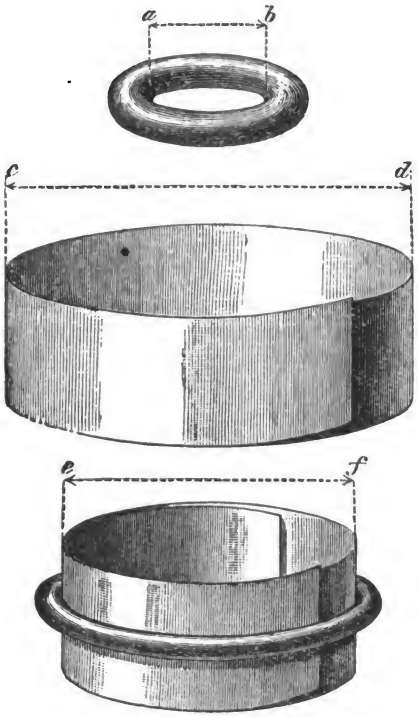

(*a*) Ring unstretched.

(*b*) Ring stretched.

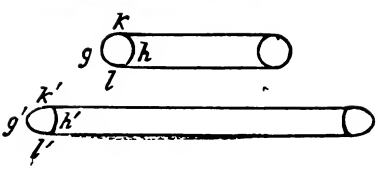

Digitized by Google

A state of stress is thus produced between the ring and the roll, the one being larger and the other smaller than at first, and each having its elastic tendency to return to its own original dimensions resisted by the reaction of the other; a normal or radial pressure acts at the surface of contact, which causes a *lengthening* of the india-rubber ring circumferentially, indicating *hoop tension;* and this same normal pressure makes the cardboard roll *smaller* in circumference, indicating *hoop pressure.* The cardboard roll is stronger than before, to resist an interior normal pressure, while the ring is weaker, but still it may be strong enough for the tension which will come upon it; and the stress in the materials is more nearly equalised.

If fig. 10 represents a section of the india-rubber ring (*a*) in its unstretched state; (*b*) when it is expanded over the cardboard roll, we note that although the ring becomes larger in diameter when it is stretched, and slightly changes in volume, owing to its elasticity, it becomes thinner in section, both in the direction of the radius and of the axis of the roll, *i.e.*, gh contracts to $g'h'$, and kl contracts to $k'l'$.

Case of a Cracked Tube.

If the A tube is cracked through longitudinally on both sides, its tensile strength is nil and the gun will not stand the same strain as before.

Thus in the 6-inch gun worked out, from p. we have the firing radial pressures,

$$p_1 = 15; \quad p_0 = 24{\cdot}74;$$

but with the A tube cracked p_0 will not be so large: the two outer tubes being undamaged we get as before

$$p_1 = 15.$$

Although the tensile strength of the A tube is nil, yet it serves to diminish the surface over which the powder pressure acts, and therefore

$$p_0 = p_1 \frac{r_1}{r_0}.$$

This may be seen also from considering the equilibrium of the A tube; the forces acting on this tube are radial pressures,

$p_1 = 15$ tons/in.^{2} over a surface $2\pi r_0$, acting inwards,

p_0 over a surface $2\pi r_0$, acting outwards,

therefore

$$(2\pi r_1)\, p_1 = (2\pi r_0)\, p_0,$$

$$p_0 = p_1 \frac{r_1}{r_0} \quad \ldots\ldots\ldots \quad \text{(XIV)},$$

$$= 15 \,.\, \frac{5{\cdot}6}{4} = 21{\cdot}0.$$

So that our maximum allowable pressure has been reduced from 24·74 to 21·0 tons/in.^{2}, due to the A tube being cracked.

Digitized by Google

Liners.

In the case of liners, no strength is accredited; for, being put in without shrinkage, they are taken as so much packing, and their effect as regards calculation of strength might be ignored but for the fact that they distribute the strain to a larger area. Of course, here, as in the case of shrinkage friction, with reference to longitudinal strength, any circumferential strength derived from the liner will be in addition to that calculated for.

Supposing the gun to have been designed for, and constructed originally with, a liner, then if p_0 represents the internal pressure on the liner, and p that transmitted to the interior of the A tube, and r_0 and r_1 the respective radii, the formula is simply

$$p_0 = p\,\frac{r}{r_0} \quad . \quad . \quad . \quad . \quad . \quad . \quad . \quad . \quad \text{(XV)},$$

the liner acting as if cracked or segmental.

THE STRAIN OF THE GUNS.

So far we have dealt only with the *stress* in the metal, but when the gunmaker wishes to set up a given pressure of shrinkage between two cylinders, he has to determine, by calculation or experiment, the slight amount by which, when cold, the external radius of one cylinder must exceed the internal radius of the next cylinder which is shrunk on it.

The outer cylinder is expanded by heat and slipped on, in order that the given initial pressure may be set up on the cooling of the outer cylinder; and this, too, when other cylinders are shrunk on afterwards.

We must therefore determine the strain and deformation set up in a given cylinder due to given applied pressure, and thus we require the equations giving the strain due to given applied stress when the co-efficients of elasticity of the metal are known.

The mathematical steps leading to the solution of this problem will be given in Part II; the general formula to be employed is

$$_mS_{m+1} = (t_m) - (t'_m)\,\frac{2r_m}{M} \quad . \quad . \quad . \quad . \quad . \quad \text{(XVI)}.$$

Here any value from 0 upwards can be given to m so as to obtain $_mS_{m+1}$, which is either the contraction of the bore for $m = 0$, or the shrinkage between hoops, or the extension of the outside layer, in inches, at any radius of r_m inches; τ and τ' are the usual initial tensions, M the modulus of elasticity, taken usually as 12,500 tons/in^2 for gun steel.

A numerical example will show the use of the formula.

Calculating by the formula above, the shrinkage of the 6-inch gun, with the values of (t) shown in figure on p. , and commencing from the interior, we find that

$$_0S_1 = (t_0) \times 2r_0 \div M = 16{\cdot}2 \times 8 \div 12{,}500 = 0{\cdot}0103 \text{ inch},$$

said practically to be 10-thousandths of an inch; this is the final contraction of the bore, or the amount by which its diameter must be turned larger at first, in order that its diameter may be 8 inches.

Digitized by Google

$$_1S_2 = [(t_1) - (t'_2)] \times 2r_1 \div M = \{\cdot4 - (-12\cdot3)\} \times 11\cdot2 \div 12{,}500 = 0\cdot0112 \text{ inch},$$

that is, the exterior of the A tube should be made 11-thousandths of an inch larger than the interior of the breech-piece.

$$_2S_3 = [(t_2) - (t'_2)] \times 2r_2 \div M = 9\cdot64 \times 17\cdot4 \div 12{,}500 = 0\cdot0135 \text{ inch},$$

or after the breech-piece has been shrunk on, its outside (now expanded) diameter should be 13-thousandths of an inch larger than the interior of the jacket.

$$_3S_4 = (t'_3) \times 2r_3 \div M = 6\cdot2 \times 23\cdot6 \div 12{,}500 = 0\cdot012 \text{ inch},$$

the elongation of the external diameter of the jacket up to its final diameter of 23·6 inches.

The values of (t_m) and (t'_m) are the *initial* stresses, and as the powder pressure P_m at r_m increases them by equal amounts to t_m and t'_m, the firing stresses, their difference is unaltered, so that

$$(t_m) - (t'_m) = t_m - t'_m;$$

hence so long as we are considering the shrinkage between hoops, we can calculate it either from the firing or initial stresses: for example, as above

$$_1S_2 = (t_1 - t'_1) \times 2r_1 \div M = (18 - 5\cdot3) \times 11\cdot2 \div 12{,}500 = 0\cdot0112$$

as before.

With several layers of metal the addition of each part that is shrunk on, modifies the initial stresses previously existing.

FIG. 11—SHRINKAGE EXAGGERATED 50 TIMES.

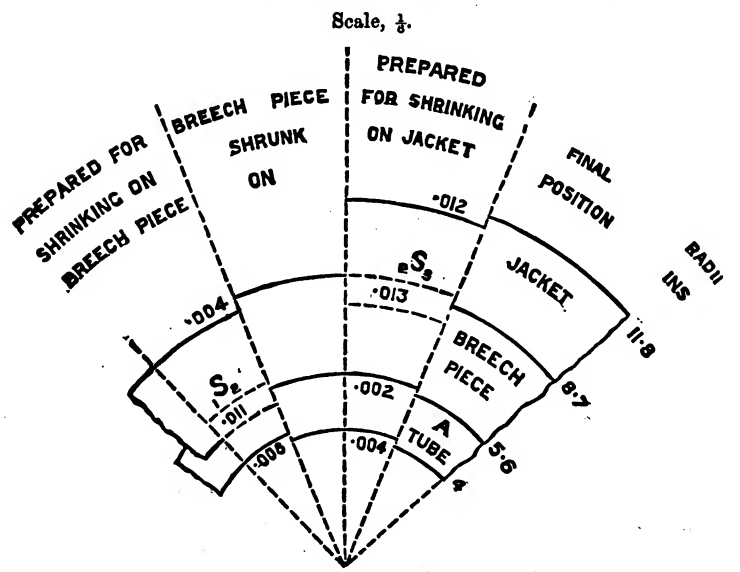

Fig. 11 shows the shrinkage (exaggerated for clearness) of the different parts, and the intermediate and final arrangements when a breech-piece and jacket are successively shrunk on, over the chamber portion of the A tube of a 6-inch B.L. gun.

Digitized by Google

WIRE GUN CONSTRUCTION.

In fig. 8, which gives the firing stresses of a 6-inch gun, it is seen from the curves of circumferential tension $t_0t'_1$, $t_1t'_2$, $t_2t'_3$ that only the *inner* fibre of each layer of metal is doing its full share of resistance when the gun is fired.

Great economy of material would be effected if we could make all the circumferential fibres take up a full uniform tension (say of 18 tons per square inch) on firing; but to secure this condition only approximately, the number of layers of metal would have to be largely increased, and the cost, complication, and time of manufacture of a gun would be enormous.

But by adopting Mr. J. A. Longridge's plan of strengthening the tube by steel wire, wound round with appropriately varying tension, we are able to make the curve of circumferential firing tension $t_1t'_2$ a straight line for a given powder pressure (fig. 13), and now all parts of the wire coil are equally strained under the interior pressure, and take an equal share in the resistance.

For full theoretical investigation of this subject, see Mr. Longridge's "Treatise on the Application of Wire to the Construction of Ordnance" (1884), and a paper of 1887, "Further Investigations regarding Wire Gun Construction," also a Work by Lieutenant G. Moch, "Les Canons à Fils d'Acier."

By winding on many layers of steel wire on an A tube, we can get every layer of the wire coil to do its full share of resistance when the gun is fired, and so greatly strengthen the gun, provided each layer of wire is wound on with a properly adjusted tension.

A steel hoop shrunk over an A tube must not be subjected to a firing tension of over 18 tons/in.^{2}, whereas steel wire can safely be subjected to a tension of 50 tons/in.^{2}, therefore we have not only a much strengthened gun by using steel wire, but there is a considerable saving in the weight of metal to be used.

In a gun which has steel hoops shrunk on, the curve of radial pressure for each hoop is given by

$$p = \frac{a}{r^2} - b,$$

and the circumferential tension by

$$t = \frac{a}{r^2} + b,$$

where a and b are constants to be determined for each hoop or tube.

These equations do not hold good for the firing stresses in a wire coil which has been wound round on an A tube; because the winding tension of each layer of wire has been adjusted so that the firing tension may be the same throughout the coil.

The jacket is required for the protection of the wire from damage and to provide the necessary longitudinal strength; it is fitted over the wire without any appreciable shrinkage.

When the gun is at rest the jacket will be free from stress, but when the gun is fired we may suppose the stress in it to be the powder stress only, on the assumption that the gun behaves as if homogeneous.

Digitized by Google

Fig. 12.

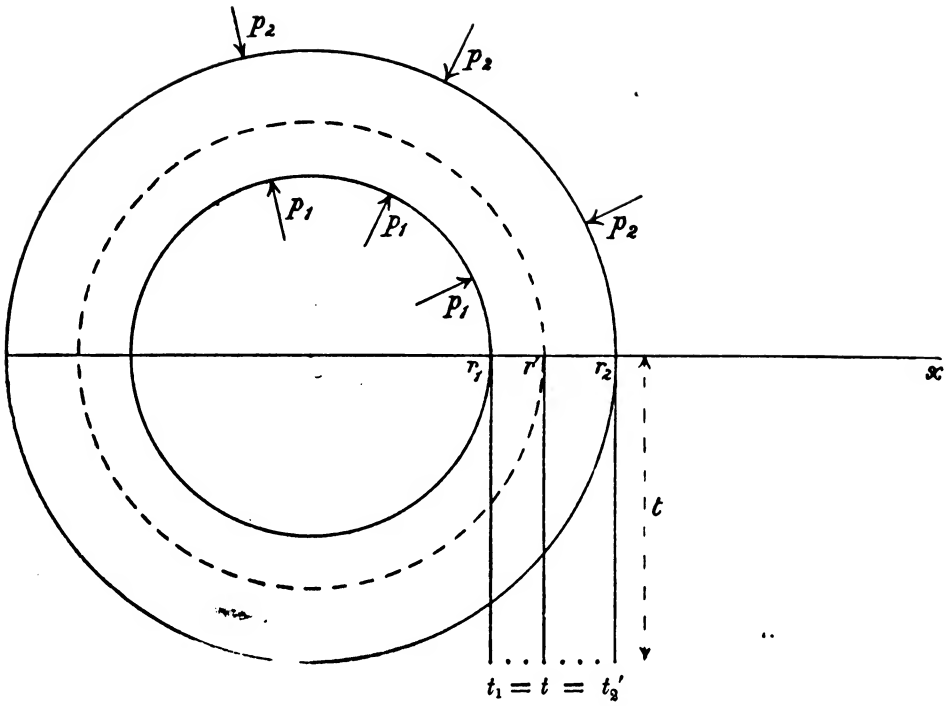

In fig. 12, let r_1 and r_2 be the internal and external radii of the wire coil, and let a powder pressure p_0 be applied so that the radial firing pressures at r_1, r_2 be p_1, p_2 respectively, and the tension throughout $= t$, so that

$$t_1 = t'_2 = t.$$

To find the radial pressure p at any point r in the wire coil.

Consider the equilibrium of the portion of the wire between r_1 and r; we have

$$p_1 r_1 = pr + t\,(r - r_1) \quad . \quad . \quad . \quad . \quad . \quad \text{(XVII)}.$$

If the portion of wire coil between r and r_2 be considered, we have

$$pr = p_2 r_2 + t\,(r_2 - r),$$

and for the whole coil from r_1 to r_2,

$$p_1 r_1 = p_2 r_2 + t\,(r_2 - r_1).$$

From these last two equations we have, by subtraction,

$$p_1 r_1 - pr = t\,(r - r_1),$$

or

$$p_1 r_1 = pr + t\,(r - r_1),$$

which is equation (XVII) over again.

From equation (XVII), by writing x for r and y for p,

$$p_1 r_1 = xy + t\,(x - r_1),$$

or

$$x\,(y + t) = (p_1 + t)\,r_1 = \text{const.} = \text{A},$$

Digitized by Google

and moving the axis of x parallel to itself at a distance t, this reduces to

$$xy = \text{const.}$$

This is the equation of a rectangular hyperbola.
From equation (XVII) we have

$$(p + t)\, r = p_1 r_1 + t r_1 = \text{const., say A,}$$

$$\therefore p + t = \frac{A}{r} \quad . \quad . \quad . \quad . \quad . \quad . \quad \text{(XVIII).}$$

This gives a convenient equation to find the radial pressure at any point in the wire coil.
In the A tube and jacket only, the equations

$$p = \frac{a}{r^2} - b,$$

$$t = \frac{a}{r^2} + b,$$

hold good to find the stress at any point.
In wire guns the limits which are usually laid down are:—

1st. That the maximum circumferential tension in the A tube on firing is 15 tons/in.^{2}, so that $t_0 = 15$.

2nd. That the crushing circumferential pressure (or negative tension) of the steel in the tube in a state of repose be not greater than 26 tons/ins.^{2}.

This crushing pressure is caused by the wire which is wound on the A tube at great tension, tending to compress tightly the tube; we have, therefore

$$(t_0) = -26.$$

This amount (26) may be reduced in parts of the gun where the the wire coil is thinner.
In wire guns at present, the wire is wound on to the A tube after the inner A tube has been fitted into it, and so at first the A tube is not fully compressed, which gives an advantage in the first life of the gun, but on boring out for lining, then the full compression takes place, and the advantage referred to is lost.
So also in the 6-inch Q.F., Mark II, where the I-B tube is shrunk on to the A tube under the wire, the metal under the wire coil should be treated as homogeneous, because in boring out for lining the A tube will be compressed, and the advantage of the shrinkage lost.
An example is now worked out fully. In the 9·2-inch B.L. Mark X, the dimensions across the middle of the powder chamber are

$r_0 =$	6·5 inches	then	$r_0^2 =$ 42·25.
$r_1 =$	11·0 ,,		$r_1^2 =$ 121·0.
$r_2 =$	13·76 ,,		$r_2^2 =$ 189·3.
$r_3 =$	16·5 ,,		$r_3^2 =$ 272·3.

Digitized by Google

We have to start with

t_0 shall not exceed 15 tons/in.^{2}

(t_0) " " $= 26$

Take

$$t_0 = 15,$$
$$(t_0) = -26.$$

Then, since firing tension = powder tension + initial tension,

$$t_0 = T_0 + (t_0)$$
$$\therefore T_0 = t_0 - (t_0) = 15 - (-26) = 41$$

The maximum powder tension is therefore 41. Treating the whole gun (A tube, wire coil and jacket) as one homogeneous mass for the powder stress we have

$$P_3 = 0 = \frac{a}{r_3^2} - b,$$

$$T_0 = 41 = \frac{a}{r_0^2} + b.$$

To get powder pressures P_0, P_1, P_2:

$$P_3 + T_0 = a\left(\frac{1}{r_3^2} + \frac{1}{r_0^2}\right),$$

$$\therefore a = \frac{r_3^2 r_0^2}{r_3^2 + r_0^2} T_0, \text{ because } P_3 = 0,$$

$$b = \frac{a}{r_3^2} = \frac{r_0^2}{r_3^2 + r_0^2} T_0,$$

$$\therefore P = \frac{a}{r^2} - b = \frac{r_0^2}{r_3^2 + r_0^2}\left(\frac{r_3^2}{r^2} - 1\right) T_0$$

$$= \frac{r_0^2}{r^2} \cdot \frac{r_3^2 - r^2}{r_3^2 + r_0^2} T_0.$$

$$P_0 = \frac{r_3^2 - r_0^2}{r_3^2 + r_0^2} 41 = \frac{272{\cdot}3 - 42{\cdot}25}{272{\cdot}3 + 42{\cdot}25} 41 = \frac{230{\cdot}05}{314{\cdot}55} 41 = 30$$

(by slide rule),

$$P_1 = \frac{r_0^2}{r_1^2} \cdot \frac{r_3^2 - r_1^2}{r_3^2 + r_0^2} 41 = \frac{42{\cdot}25}{121} \cdot \frac{151{\cdot}3}{314{\cdot}55} 41 = 6{\cdot}88,$$

$$P_2 = \frac{r_0^2}{r_2^2} \cdot \frac{r_3^2 - r_2^2}{r_3^2 + r_0^2} 41 = \frac{42{\cdot}25}{189{\cdot}3} \cdot \frac{83{\cdot}0}{314{\cdot}515} 41 = 2{\cdot}43,$$

$$P_3 = 0.$$

Again $T_3 - P_3 = 2b = T_2 - P_2 = T_1 - P_1 = T_0 - P_0$,

$$\therefore T_3 = (T_0 - P_0) + P_3 = (41 - 30) + 0 = 11,$$
$$T_2 = (T_0 - P_0) + P_2 = 11 + 2{\cdot}43 = 13{\cdot}43,$$
$$T_1 = (T_0 - P_0) + P_1 = 11 + 6{\cdot}88 = 17{\cdot}88.$$

Digitized by Google

We have now found all the powder pressures, to one place of decimals; these are

$$P_0 = 30, \qquad T_0 = 41,$$
$$P_1 = 6{\cdot}9, \qquad T_1 = 17{\cdot}9,$$
$$P_2 = 2{\cdot}4, \qquad T_2 = 13{\cdot}4,$$
$$P_3 = 0, \qquad T_3 = 11.$$

Firing Stress p, t.

The maximum powder pressure P_0 has been found, and in firing this is also the maximum pressure inside the bore,

$$\therefore p_0 = P_0 = 30.$$

In the A tube (which includes the inner A tube, both tubes being regarded as homogeneous)

$$p_0 = \frac{r_1^2 - r_0^2}{r_1^2 + r_0^2}(t_0 + p_1) + p_1 \text{ (gun maker's formula)},$$

$$30 = \frac{78{\cdot}75}{163{\cdot}25}(15 + p_1) + p_1 = {\cdot}4825(15 + p_1) + p_1,$$

$$\therefore 1{\cdot}4825\, p_1 = 30 - 7{\cdot}237 = 22{\cdot}76,$$

$$\therefore p_1 = 15{\cdot}34.$$

So

$$t'_1 = (t_0 - p_0) + p_1(15 - 30{\cdot}0) + 15{\cdot}34 = 0{\cdot}34.$$

In the wire coil, each layer of wire is wound on so that on firing the tension is the same, so that $t_1 = t'_2 = t$ throughout. Then, from considering the equilibrium of the whole coil,

$$p_1 r_1 = p_2 r_2 + t(r_2 - r_1),$$

$$\therefore t = \frac{p_1 r_1 - p_2 r_2}{r_2 - r_1} = \frac{168{\cdot}74 - 33{\cdot}02}{2{\cdot}76} = \frac{135{\cdot}72}{2{\cdot}76}$$

$$= 49{\cdot}15.$$

$$\therefore t_1 = t'_2 = t = 49{\cdot}15.$$

Since there are no initial stresses in the jacket

$$p_2 = P_2 = 2{\cdot}4,$$
$$p_3 = P_3 = 0,$$
$$t_2 = T_2 = 13{\cdot}4,$$
$$t'_3 = T_3 = 11.$$

Digitized by Google

THE NEW YORK
PUBLIC LIBRARY

ASTOR, LENOX AND
TILDEN FOUNDATIONS.

Digitized by Google

Figure 13.

SCALE FOR RADII 1/8

FIRING STRESSES

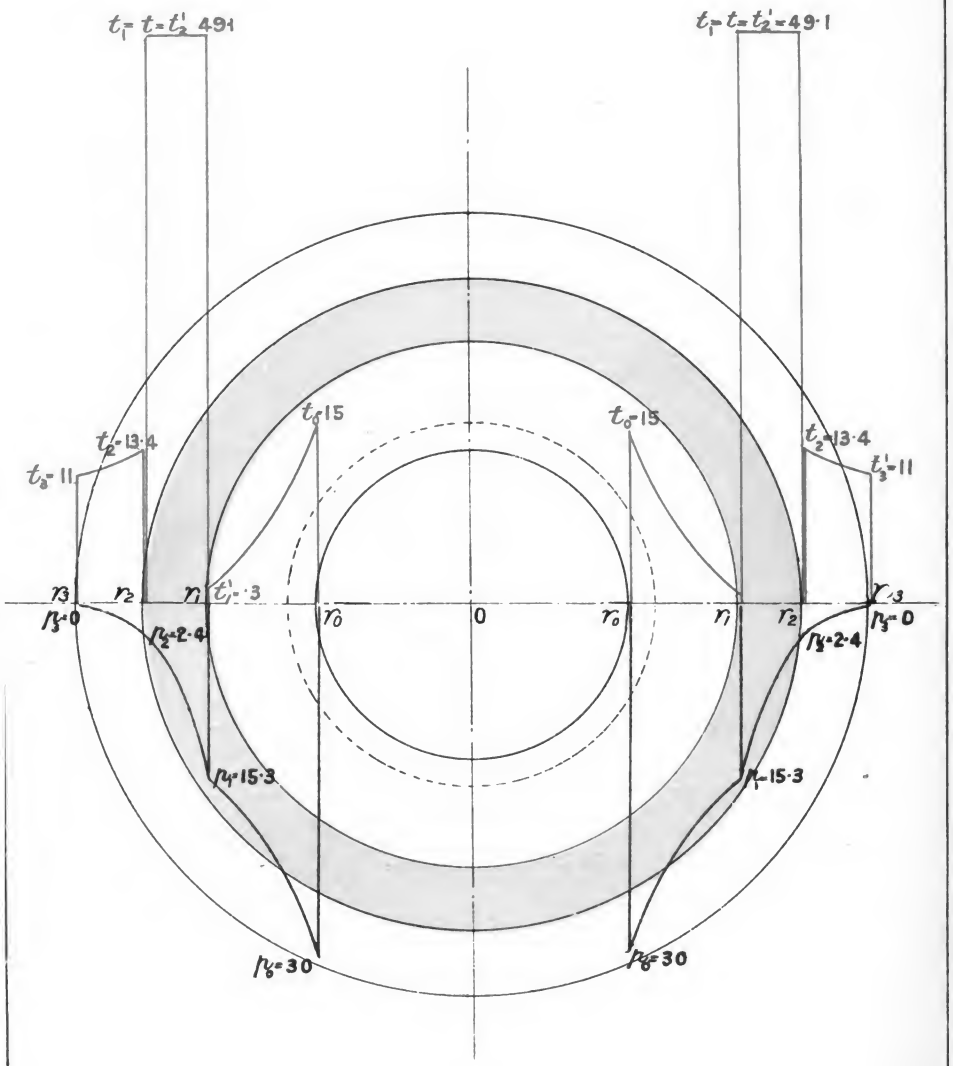

6075 3 07

Weller & Graham Ltd. Litho London

Digitized by Google

THE NEW YORK
PUBLIC LIBRARY
ASTOR, LENOX AND
TILDEN FOUNDATIONS.

Digitized by Google

Figure 14.

SCALE OF RADII 1/8.

POWDER STRESSES

INITIAL STRESSES

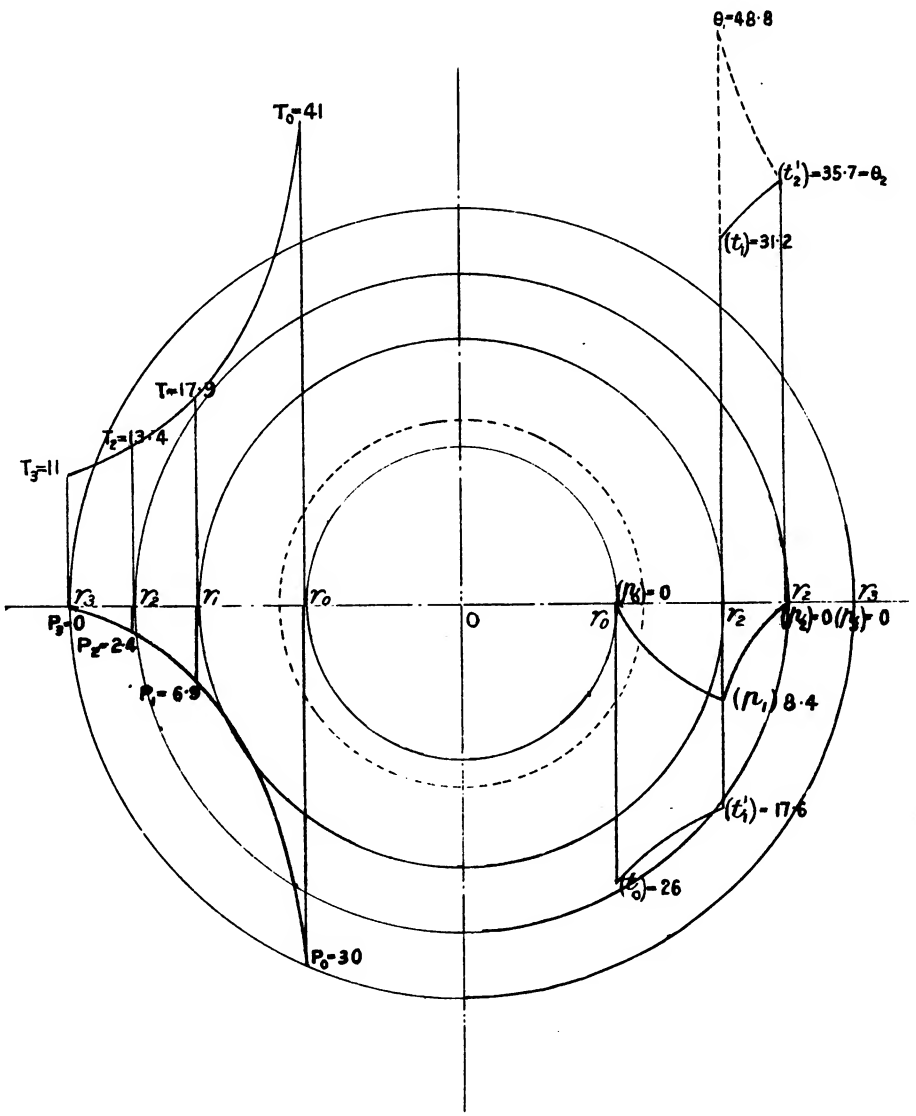

Weller & Graham, Ltd Litho London

Digitized by Google

Thus all the firing stresses are found; we have to one place of decimals,

$$\text{A tube}\begin{cases} p_0 = 30 & t_0 = 15 \\ p_1 = 15{\cdot}3 & t'_1 = 0{\cdot}3, \end{cases}$$

$$\text{wire coil} \qquad t_1 = t'_2 = t = 49{\cdot}1,$$

$$\text{jacket}\begin{cases} p_2 = 2{\cdot}4 & t_2 = 13{\cdot}4 \\ p_3 = 0 & t'_3 = 11. \end{cases}$$

Initial Stresses (p), (t).

$$\begin{aligned}
(p_0) &= p_0 - P_0 = 30 - 30 = 0 \\
(p_1) &= p_1 - P_1 = 15{\cdot}3 - 6{\cdot}9 = 8{\cdot}4 \\
(p_2) &= p_2 - P_2 = \qquad\quad = 0 \\
(p_3) &= p_3 - P_3 = \qquad\quad = 0 \\
(t_0) &= t_0 - T_0 = 15 - 41 = -26 \\
(t'_1) &= t'_1 - T_1 = 0{\cdot}3 - 17{\cdot}9 = -17{\cdot}6 \\
(t_1) &= t_1 - T_1 = 49{\cdot}1 - 17{\cdot}9 = 31{\cdot}2 \\
(t'_2) &= t'_2 - T_2 = 49{\cdot}1 - 13{\cdot}4 = 35{\cdot}7 \\
(t_2) &= t_2 - T_2 = 13{\cdot}4 - 13{\cdot}4 = 0 \\
(t'_3) &= t'_3 - T_3 = 11 - 11 = 0.
\end{aligned}$$

Figs. 14 and 15 show the various stresses to scale.

From the figure giving the firing stresses, it will be seen that since the outer edge of the A tube has practically no circumferential tension ($t'_1 = 0{\cdot}3$) on firing, that the chief stress on firing is thrown upon the wire.

Fig. 13.

Digitized by Google

Fig. 14.

Winding Tension.

Fig. 14 shows the curve (t_1) (t) (t'_2) of initial tension of the wire; it is necessary now to find out the tension with which each layer of wire must be wound on the tube so that when the whole wire coil is completed, we shall have obtained the correct initial tension of the wire.

Fig. 15.

In fig. 15 the shaded portion represents the wire coil, and the dotted circle has a radius r. Let θ be the winding tension for this layer of wire, then the outer layers of wire will compress it, and so diminish its winding on tension by an amount $(t)^*$; what is required is that $\theta + (t)^*$ shall equal the correct initial tension of this layer of wire, that is, we must have

$$\theta + (t)^* = (t) \quad . \quad . \quad . \quad . \quad . \quad . \quad \text{(XIX)},$$

$(t)^*$ will be shown to be negative in value.

Suppose the radial pressure at r due to the outer layers is (p), then we want to find what compressions (*i.e.*, negative tension) are produced by (p).

Digitized by Google

Figure 15.

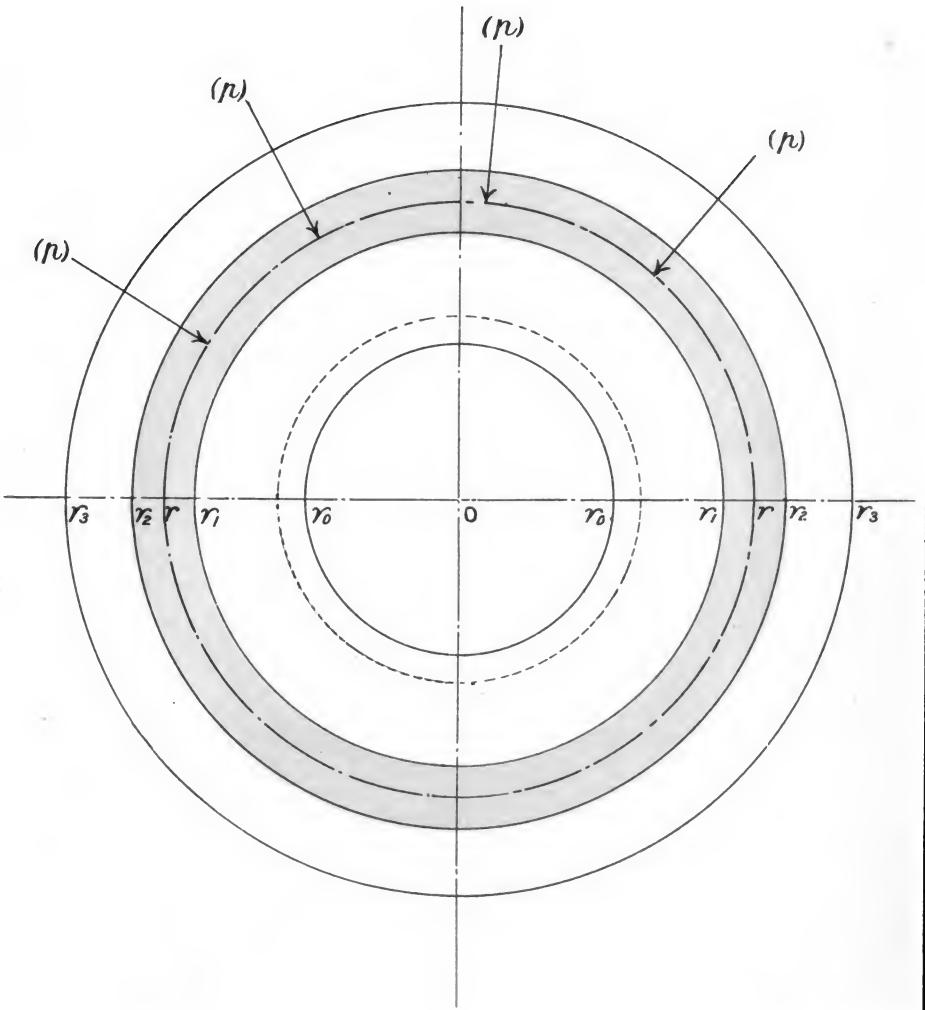

6075. 3. 07

Weller & Graham, Ltd. Litho. London.

Digitized by Google

THE NEW YORK
PUBLIC LIBRARY

ASTOR, LENOX AND
TILDEN FOUNDATIONS.

Digitized by Google

Treating the gun from r_0 to r as homogeneous, we have

$$(p) = \frac{a}{r} - b,$$

$$(p_0) = 0 = \frac{a}{r_0^2} - b,$$

$$(t)^* = \frac{a}{r^2} + b.$$

Whence

$$a = -\frac{r_0^2 r^2}{r^2 - r_0^2}(p),$$

$$b = -\frac{r^2}{r^2 - r_0^2}(p),$$

$$\therefore (t)^* = -\frac{r^2 + r_0^2}{r^2 - r_0^2}(p).$$

$(t)^*$ is negative, denoting a compression.

From (19)

$$\theta = (t) - (t)^*$$

$$= (t) + \frac{r^2 + r_0^2}{r_2 - r_0^2}(p) \quad \ldots\ldots \quad \text{(XX)}.$$

In this

$$(t) = t - \mathrm{T}$$

$$= t - \frac{r_0^2}{r^2} \cdot \frac{r_3^2 + r^2}{r_3^2 - r_0^2} p_0,$$

also

$$(p) = p - \mathrm{P} = p - \frac{r_0^2}{r^2} \cdot \frac{r_3^2 - r^2}{r_3^2 - r_0^2} p_0.$$

Lastly, from consideration of the equilibrium of the wire coil from r to r_2 (or from r_1 to r),

$$pr = p_2 r_2 + t(r_2 - r),$$

whence

$$p = \frac{p_2 r_2 + t(r_2 - r)}{r},$$

$$\therefore (p) = \frac{p_2 r_2 + t(r_2 - r)}{r} - \frac{r_0^2}{r^2} \cdot \frac{r_3^2 - r^2}{r_3^2 - r_0^2} p_0. \quad \text{(XXI)}.$$

Substituting these values of (t) and (p) in (20) we have

$$\theta = t - \frac{r_0^2}{r^2} \cdot \frac{r_3^2 + r^2}{r_3^2 - r_0^2} p_0$$

$$+ \left[\frac{p_2 r_2 + t(r_2 - r)}{r} - \frac{r_0^2}{r^2} \cdot \frac{r_3^2 - r^2}{r_3^2 - r_0^2} p_0\right] \frac{r^2 + r_0^2}{r^2 - r_0^2}.$$

Digitized by Google

Coefficient of p_0 is

$$= -\frac{r_0^2}{r^2} \cdot \frac{r_3^2 + r^2}{r_3^2 - r_0^2} - \frac{r_0^2}{r^2} \cdot \frac{(r_3^2 - r^2)(r^2 + r_0^2)}{(r_3^2 - r_0^2)(r^2 - r_0^2)}$$

$$= -\frac{r_0^2}{r^2} \cdot \frac{(r_3^2 + r^2)(r^2 - r_0^2) + (r_3^2 - r^2)(r^2 + r_0^2)}{(r_3^2 - r_0^2)(r^2 - r_0^2)},$$

$$= -\frac{r_0^2}{r^2} \cdot \frac{2r_3^2 r^2 - 2r^2 r_0^2}{(r_3^2 - r_0^2)(r^2 - r_0^2)},$$

$$= -\frac{r_0^2}{r^2} \cdot \frac{2r^2(r_3^2 - r_0^2)}{(r_3^2 - r_0^2)(r^2 - r_0^2)},$$

$$= -\frac{2r_0^2}{r^2 - r_0^2}.$$

Coefficient of t

$$= 1 + \frac{r_2 - r}{r} \cdot \frac{r^2 + r_0^2}{r^2 - r_0^2},$$

$$= \frac{r^3 - rr_0^2 + r^2 r_2 - r^3 + r_2 r_0^2 - rr_0^2}{r(r^2 - r_0^2)},$$

$$= -\frac{2rr_0^2 + r_2(r^2 + r_0^2)}{r(r^2 - r_0^2)},$$

$$= -\frac{2r_0^2}{r^2 - r_0^2} + \frac{r_2}{r} \cdot \frac{r^2 + r_0^2}{r^2 - r_0^2}.$$

$$\therefore \theta = (t + p_2)\frac{r_2}{r} \cdot \frac{r^2 + r_0^2}{r^2 - r_0^2} - \frac{2r_0^2}{r^2 - r_0^2}(t + p_0) \quad . \quad \text{(XXII)},$$

resolving into partial fractions

$$\frac{r_2}{r} \cdot \frac{r^2 + r_0^2}{r^2 - r_0^2} = -\frac{r_2}{r} + \frac{r_2}{r - r_0} + \frac{r_2}{r - r_0},$$

so

$$\frac{2r_0^2}{r^2 - r_0^2} = \frac{r_0}{r - r_0} - \frac{r_0}{r + r_0}.$$

$$\therefore \theta = (t + p_2)\left(-\frac{r_2}{r} + \frac{r_2}{r - r_0} + \frac{r_2}{r - r_0}\right) - (t + p_0)\left(\frac{r_0}{r - r_0} - \frac{r_0}{r + r_0}\right),$$

$$= -\frac{(t + p_2) r_2}{r} + \frac{(t + p_2) r_2 - (t + p_0) r_0}{r - r_0} + \frac{(t + p_2) r_2 + (t + p_0) r_0}{r + r_0}$$

$$= \frac{A}{r} + \frac{B}{r - r_0} + \frac{C}{r + r_0} \quad . \quad . \quad . \quad . \quad . \quad . \quad . \quad . \quad . \quad \text{(XXIII)},$$

where

$$A = -(t + p_2) r_2,$$

$$B = (t + p_2) r_2 - (t + p_0) r_0,$$

$$C = (t + p_2) r_2 + (t + p_0) r_0.$$

Digitized by Google

Formula (XXIII) is very convenient for calculating θ for any value of r, since A, B, and C are the same for each layer.

The winding tension of the last layer of wire must be the same as the tension in repose, so that at r_2,

$$\theta_2 = (t'_2) = 35{\cdot}7 \text{ tons/in}^2,$$

since the jacket is put on without shrinking, and therefore $(p_2) = \theta$ in formula (XX).

The winding on tension of the inner or first layer can be obtained directly from (XX), thus

$$\theta_1 = (t_1) + \frac{r_1^2 + r_0^2}{r_1^2 - r_0^2}(p_1),$$

and (t_1), (p_1) have already been found,

$$\therefore \theta_1 = 31{\cdot}2 + \frac{(11)^2 - (6{\cdot}5)^2}{(11)^2 + (6{\cdot}5)^2} 8{\cdot}4,$$

$$= 48{\cdot}7 \text{ tons/in.}^2.$$

This value could have been obtained equally well from (XXIII)

$$\theta_1 = \frac{A}{r_1} + \frac{B}{r_1 - r_0} + \frac{C}{r_1 + r_0}.$$

The Longitudinal Tension in the Gun.

Practically it is usual to take the longitudinal tension as uniform across a cross section and as due to the powder pressure in the bore, treated as a closed vessel, closed at one end by the breech-screw, and at the other by the shot.

Thus supposing a breech-screw to gear into an A tube of which the internal radius is r_0 and the external radius of the gun is r_2, taking P_0 as the powder pressure, the average value R of the longitudinal tension will be found as follows:—The pressure multiplied by the sectional area of the chamber is resisted by a cross section of the metal subjected to longitudinal tension (according to the design of the gun); for equilibrium, these must be equal, therefore in this case

$$P_0 \pi r_0^2 = R\pi (r_2^2 - r_0^2)$$

$$R = P_0 \frac{r_0^2}{r_2^2 - r_0^2} \text{ tons/in.}^2.$$

In all steel guns of modern construction the breech-screw gears into the layer of metal above the A tube; in smaller guns direct; in heavier pieces of the most recent construction by means of a steel bush; the inner tube is thus relieved of longitudinal stress at the breech. For a gun consisting of a tube and jacket only, the formula would then become

$$R = P_0 \frac{r_0^2}{r_2^2 - r_1^2}.$$

Considering the longitudinal strength of the 6-inch B.L. gun,

$$P_0 = \frac{r_2^2 - r_1^2}{r_0^2} R;$$

with the given numerical values and putting $R = R_1 = 18$ gives

Digitized by Google

$P_0 = 121$, and dividing this by a normal pressure of 17 tons, we get a longitudinal factor of safety $= 7{\cdot}1$.

Practically the longitudinal strength is considered separately from the circumferential, and is specially provided for by shoulder, of which the *resistance to shearing* constitutes the longitudinal strength as calculated. No account is taken of frictional grip due to shrinkage, for it is considered as extremely probable that at the critical moment this becomes loosened by the elasticity of the different layers asserting itself more rapidly towards the interior as soon as the highest pressure has passed, while there is still a considerable longitudinal stress.

It is considered inadvisable to rely upon shrinkage in any way for longitudinal strength, and, consequently, any strength in this direction derived from the frictional grip will be in addition to the calculated strength.

The strain sustained by a shoulder is taken as a purely shearing one, and the strength of a shoulder is consequently dependent on its length; shearing strength, like resistance to tension, being directly proportional to the extent of surface where separation would take place. The strength is also here taken to be the same (in tons per square inch), which, if not strictly true, is rather in favour of the shearing strength.

The calculation, therefore, of length of shoulder for a given hoop is simple. For if AB is the supporting hoop, of internal and external

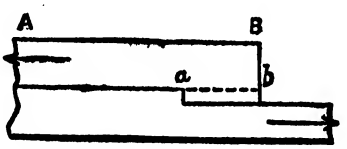

radii r_1, r_2 and length of shoulder ab ($= l$ say), it is only necessary to make the cylindrical area of ab = the annular sectional area of the hoop, or—

$$\pi(r_2^2 - r_1^2) = 2\pi r_1 l,$$

whence,

$$l = \frac{r_2^2 - r_1^2}{2r_1}.$$

The actual longitudinal strength of this arrangement would appear to be—

$$\pi(r_2^2 - r_1^2)\ \mathrm{T},$$

or

$$2\pi r_1 l \mathrm{T},$$

T being the resistance to rupture by tension or shearing in tons per square inch of material where separation would take place.

EXAMPLES.

1. What is the maximum allowable pressure in the chamber (diam. 8 inches) of a 6-inch B.L. steel gun having an A tube $1\frac{1}{2}$ inches thick, breech-piece and jacket 3 inches each ?

(*Answer*, 24 tons/in.^{2}.)

Digitized by Google

2. What is the maximum allowable chamber pressure in a steel gun having a chamber diameter 4 inches, and thickness of metal in A tube and jacket 1 and 2 inches respectively?

(*Answer*, 17·6 tons/in.².)

3. Calculate the initial stress of repose in a 5-inch B.L. steel gun having chamber diameter 6 inches, tube 2 inches, and jacket 4 inches thick?

(*Answer*, $(t_0) = -11{\cdot}25$; $(t'_1) = -7{\cdot}63$; $(t_1) = 6{\cdot}87$; $(t'_2) = 3.25$; $(p_1) = 3{\cdot}62$.)

4. What will be stress on firing of the gun in problem 3 if a charge giving 16 tons/in.² chamber pressure is used?

(*Answer*, $p_0 = 16$; $p_1 = 8{\cdot}1$; $t_0 = 8{\cdot}75$; $t_1 = 15{\cdot}35$; $t'_1 = 0{\cdot}85$; $t_2 = 7{\cdot}25$; $P_1 = 4{\cdot}48$; $T_0 = 20$; $T_1 = 8{\cdot}48$; $T'_2 = 4$.)

5. A gun of two layers of steel is to be designed to stand a maximum pressure in the chamber (diameter 5·8 inches) of 21 tons/in.², the tube being 2·1 inches thick; calculate what should be the external diameter of the gun.

(*Answer*, 17·372 inches.)

6. Calculate what the thickness of steel should be at two points on the chase of a light Q.F. gun of 3 inches calibre, where gas pressures of 5 and 4 tons/in.² respectively are expected. A factor of safety of 2 must be allowed, and the surface of the bore must not be strained to more than 15 tons/in.².

(*Answer*, 1·854 inches and 1·219 inches.)

7. The wire coil of a 4·7-inch quick-firing gun exerts an initial radial pressure on the A tube of 7·1 tons/in.²; calculate the state of initial hoop pressure of the latter, which is 1¼ inch thick, and has an internal diameter (at the centre of the cartridge chamber) of 5 inches.

(*Answer*, 18·46 tons/in.² at the outside.)
25·56 „ „ inside.)

8. At the commencement of the rifling in a 5-inch B.L. howitzer, the thickness of the jacket and A and B tubes is 1 inch. Calculate the maximum allowable gas pressure, and the skin circumferential tension on the outside of the jacket in repose.

Calculate the maximum pressure allowable when

(*a*) jacket is cracked;
(*b*) B tube is cracked;
(*c*) A tube cracked.

(*Answer*, $P_0 = 16{\cdot}7$, $(t'_3) = 5{\cdot}8$):
(*a*.) 10·70; (*b*.) 11·00; (*c*.) 12·50.

9. If the dimensions midway across the chamber of a 4·7-inch Q.F. Mark IV gun be $r_0 = 2{\cdot}5$, $r_1 = 4$, thickness of wire coil 1·5, thickness of jacket 2·0, show on diagrams to scale the complete firing, powder and initial stresses for a maximum allowable gas pressure.

10. What would be firing stresses in problem 9 if a charge giving 17 tons/in.² chamber pressure is used?

11. In the three following wire guns, compare the maximum allowable pressure in the chamber on firing, supposing that on the inner surface of the A tube the maximum allowable tension on firing is 15 tons/in.², and the maximum allowable compression at rest is 26 tons/in.²,

Digitized by Google

	Diameter of chamber.	Thickness of A tube.	Thickness of wire coil.	Thickness of jacket.
a ..	16	4·44	4·56	4
b ..	17·5	4·88	4·80	3·87
c ..	18	4·335	4·58	3·085

(*Answer*, (*a*.) 30·61 tons/in.²
(*b*.) 30·05 „
(*c*.) 28·28 „ .)

12. Find the winding-on tension of the first and last layers of wire in the case of the gun in question 10*a*.
(*Answer*, 35·19; 22·68.)

13. Supposing the inner A tube (thickness 1·925 inch) of the gun in question 11*a* to be split, find the maximum allowable pressure in the chamber. (*Answer*, 28·1 tons/in.².)

14. Calculate the firing stress in the case of the gun given in question 10*b*, supposing that the service charge gave a maximum pressure of 15 tons/in.².
(*Answer*—

$t_0 = -5{\cdot}552$ $\quad t'_1 = -9{\cdot}095$
$t_1 = 27{\cdot}145$ $\quad t'_2 = 30{\cdot}475$
$t_2 = 6{\cdot}715$ $\quad t'_2 = 5{\cdot}448$.)

SECTION II.—THE RIFLING OF GUNS.

A gun is said to be rifled when the interior of the bore is cut into a number of spiral grooves, intended to engage in the projectile, and to give it a spin on leaving the muzzle.

In this manner the gun is enabled to fire an elongated projectile heavier than a spherical shot, and less influenced by the resistance of the air, so that the projectile ranges farther and hits harder and straighter; the spin imparted is sufficient to keep the shot moving point foremost, as otherwise the shot, if fired from a smooth bore, would soon set its axis across the line of motion, and the accuracy and range would be greatly diminished.

The requisite angle at which the grooves leave the muzzle is determined by the outside shape and proportions of the projectile, and by its interior density and distribution of material; but the grooves in passing from the breech to the muzzle may be made either—

(i) in a uniform twist,
or (ii) in an increasing twist.

In the uniform twist the form of the grooves is a uniform spiral or helix, so that, if traced on a sheet of paper which is wrapped on the interior of the bore, the curve becomes a straight line when the paper is developed, or laid out flat.

This can be illustrated by a sheet of paper wrapped round a pencil, the angle of the rifling being the angle between the axis of the pencil and the edge of the paper.

Digitized by Google

In the gaining twist the developed curve is one which becomes more and more inclined to the line of axis of the bore in passing from the breech to the muzzle, where the inclination β to the axis must be the same as in the uniform twist if the gun is required to fire the same projectile.

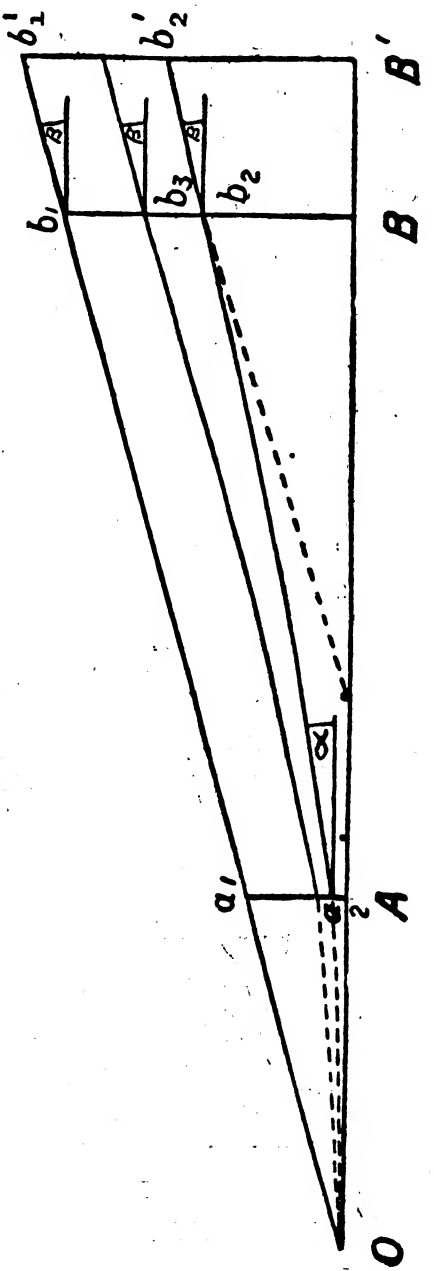

Fig. 1.

Digitized by Google

The shape of the curve of the groove when developed is exhibited in the form and position of the rifling bar of a rifling machine, taking AB to represent the line of axis, and a_1b_1, *or* a_3b_3, the rifling bar or the developed curve of the groove.

The twist of rifling is estimated in artillery as one turn in so many calibres; thus, if the twist is one turn in n calibres, the pitch of the helix, if uniform, is n calibres, or nd inches, if the calibre is d inches; and if β denotes the angle of rifling, that is the angle which the groove makes with the axis,

$$\tan \beta = \frac{\pi d}{nd} = \frac{\pi}{n}.$$

Thus, if $\beta = 7°$, $n = \pi \cot \beta = 25{\cdot}6$.

If the powder pressure and the frictional resistance in the bore are uniform, then the forces producing the rotation are uniform with a uniform twist.

But, as the powder pressure reaches a maximum after a short travel of the projectile, and afterwards rapidly diminishes towards the muzzle, the forces producing rotation on a uniform twist are apt to become excessive at the outset near the breech.

With a view of lessening this excessive stress and of producing more uniformity, the gaining twist was adopted.

The first increasing twist employed was parabolic in its developed form, starting from its vertex O parallel to the axis OAB, and finishing at the muzzle at b_2 at an inclination β, the same as that of the uniform twist, developed into the straight line Ob.

Then, from the property of the parabola, the tangent at b_2, which is parallel to Ob, will pass through the middle point of OB; also, b_2 will be the middle point of Bb_1, so that the projectile will now be turned through only half the angle turned through on the uniform twist, and this was formerly considered an advantage.

It was found, however, that this parabolic twist threw too much strain on the muzzle B, so an intermediate twist was adopted in the 80-ton gun, composed of a curve called the *semi-cubical parabola*, starting from O in the direction of OA, and finishing at b_3 in the direction Ob, such that B$b_3 = \frac{2}{3}$ Bb, and the tangent at b_3, therefore, passes through the point of trisection of OB, nearest to O.

But now it is considered preferable, when a gaining twist is employed, to take the breech line at a point A instead of O, so that the rifling bar is a_2b_2, starting from a_2 at a certain angle a, with the axis of the bore at AB, or at a certain twist of one turn in m calibres, where m is given by—

$$\tan a = \frac{\pi}{m};$$

and to steady the shot at the muzzle, the muzzle line is moved from B to B′, and the part of the rifling bar from b_2 to b_2' is made straight and parallel to b_1b_1', so that the twist is uniform from B to B′.

Thus, the rifling starts at the breech line A at a twist of one turn in m calibres, and the twist increases up to one turn in n calibres at B, usually on a parabolic twist, although the bar a_2b_2 may be the arc of a circle; and from B to the muzzle B′ the twist is uniform, and one turn in n calibres.

Thus, for instance, the 6-inch Mark I gun is rifled for 65 inches with a twist increasing from one in 120 to one in 35, and continued for the remaining 59 inches to the muzzle on a uniform twist of one in 35.

Digitized by Google

But Sir Andrew Noble has found experimentally that the work lost by the friction of the grooves, and the mean rotating pressure is less with the uniform than with the gaining twist, although the maximum initial forces producing rotation are greater; this is shown by the accompanying Tables (I and II) of results of experiments with a 12-cm. (4·7-inch) gun, firing a 45-lb. projectile with a velocity of 2084 fs, published in the "Proceedings of the Royal Society," vol. 50.

Table I.

Travel of shot in the bore.	Total thrust on the base of the shot.	Velocity acquired.	Total thrust between the driving face of the grooves and the driving ring.	
			Uniform twist.	Increasing twist.
feet.	tons.	ft/sec.	tons.	tons.
0·5	254·7	548	19·9	7·9
1·0	264·0	849	20·7	9·7
1·5	245·0	1064	19·2	10·3
2·0	207·9	1224	16·3	10·5
2·5	175·7	1343	13·7	10·5
3·0	150·7	1437	11·8	10·4
4·0	115·2	1577	9·1	10·5
5·0	94·9	1680	7·4	10·8
6·0	80·6	1761	6·3	11·1
7·0	69·5	1828	5·4	11·4
8·0	60·0	1884	4·7	11·6
9·0	52·1	1931	4·1	11·8
10·0	44·8	1970	3·5	11·9
11·0	38·4	2004	3·0	12·0
12·0	32·9	2032	2·6	12·0
13·0	28·4	2056	2·2	12·1
14·0	24·3	2076	1·9	12·1
14·4	22·6	2084	1·8	12·1

Table II.

Travel of shot in bore in feet.	Total pressure on base of shot in tons.	Velocity, ft/sec.	Total pressure R between driving surface of groove and ring of projectile in tons.
0·5	254·7	548	7·9
1·0	264·0	849	9·7
1·5	245·0	1064	10·3
2.0	207·9	1224	10·5
2·5	175·7	1343	10·5
3·0	150·7	1437	10·4
4·0	115·2	1577	10·5
5·0	94·9	1680	10·8
6·0	80·6	1761	11·1
7·0	69·5	1829	11·4
8·0	60·0	1884	11·6
9·0	52·1	1931	11·8
10·0	44·8	1970	11·9
11·0	38·4	2004	12·0
12·0	32·9	2032	12·0
13·0	28·4	2056	12·1
14·0	24·3	2076	12·1
14·4	22·6	2084	12·1

Digitized by Google

If V denotes the forward axial velocity with which the shot leaves the muzzle, then the spin imparts to the points on the outside cylindrical surface a component velocity at right angles to the axis of magnitude—

$$V \tan \beta = \frac{\pi V}{n} \text{ f/s};$$

this is called the *linear velocity of rotation.*

The *angular velocity of rotation*, in radians/second, is obtained by dividing this by the radius of the shot in feet, a or $d \div 24$; it is, therefore—

$$\frac{\pi V}{nd} \text{ or } \frac{24\pi V}{nd};$$

and this again is converted into revolutions per second by dividing by 2π, since one revolution equals 2π radians; the shot, therefore, makes—

$$\frac{V}{2nd} \text{ or } \frac{12V}{nd} \text{ revs/sec.}$$

Thus, comparing the 6-inch gun and magazine rifle, in each of which $n = 30$; then for the same muzzle velocity, say 2000 f/s, the linear velocities of rotation will be the same, namely 209 f/s, but the rifle bullet will make 2640 revs/second, against 133 revs/second of the 6-inch projectile.

Formerly it was considered requisite for a projectile to possess a given linear velocity of rotation to ensure its stability in flight, and for this reason the twist of rifling in howitzers, firing with low velocities, was made very quick, even up to one in 12 calibres.

But, it is now found that the linear velocity of rotation should be a given fraction of the initial velocity, so that the same twist of rifling is suitable for high or low velocities, with a given projectile; but the determination of the appropriate twist from theoretical considerations is not a simple matter, and the twist must be settled by experiment to a great extent.

The investigation of the stability of an elongated projectile moving through the air in the direction of its axis with given angular velocity is very similar to that required for the stability of a top or gyrostat, spinning with its axis vertical, and the behaviour of the bodies have a close analogy. The annexed Table shows the result of such calculations.

When a top is spun, the motion of the axis is at first unsteady, but this unsteadiness soon disappears, and the top then spins upright, when it is said to go to sleep; after a time the friction of the point reduces the spin to such an extent that the vertical position becomes unstable, and the axis again begins to wobble; the axis inclines more and more from the upright position, until finally the top falls over on its side.

So, too, an elongated projectile fired from a rifled gun is at first rather unsteady from the first portion of its flight, but the friction of the air soon destroys the irregular gyrations, and the shot, if provided with sufficient spin, proceeds steadily in the direction of the axis.

Digitized by Google

Table of Rotation for Stability of Projectiles.

(Calculated from Professor Greenhill's formula by Major Cundill, R.A., and extended by Mr. A. G. Hadcock, R.A., Inspector of Ordnance Machinery, *vide Proc. R.A.I.*, vol. xi, No. 2, and vol. xiv, No. 3.)

Length of projectile in calibres.	Minimum twist at muzzle of gun requisite to give stability = 1 turn in n calibres.			
	Cast-iron common shell; cavity $=\frac{8}{27}$ths vol. of shell. (Density of cast iron 7·207.)	Palliser shell; cavity $=\frac{1}{8}$th vol. of shell. (Density of chilled iron 8·000.)	Solid steel bullet. (Density of steel 8·000.)	Solid lead and tin bullets of similar composition to M.-H. bullets. (Density of alloy 10·9.)
	n	n	n	n
2·0	63·87	71·08	72·21	84·29
2·1	59·84	66·59	67·66	78·98
2·2	56·31	62·67	63·67	74·32
2·3	53·19	59·19	60·14	70·20
2·4	50·41	56·10	57·00	66·53
2·5	47·91	53·32	54·17	63·24
2·6	45·65	50·81	51·62	60·26
2·7	43·61	48·53	49·30	57·55
2·8	41·74	46·45	47·19	55·09
2·9	40·02	44·54	45·25	52·72
3·0	38·45	42·79	43·47	50·74
3·1	36·99	41·16	41·82	48·82
3·2	35·64	39·66	40·30	47·04
3·3	34·39	38·27	38·84	45·38
3·4	33·22	36·97	37·56	43·84
3·5	32·13	35·75	36·33	42·40
3·6	31·11	34·62	35·17	41·05
3·7	30·15	33·55	34·09	39·79
3·8	29·25	32·55	33·07	38·61
3·9	28·40	31·61	32·11	37·48
4·0	27·60	30·72	31·21	36·43
4·1	26·85	29·88	30·36	35·43
4·2	26·13	29·08	29·55	34·49
4·3	25·45	28·33	28·78	33·59
4·4	24·81	27·61	28·05	32·74
4·5	24·20	26·93	27·36	31·94
4·6	23·65	26·32	26·74	31·21
4·7	23·06	25·66	26·08	30·44
4·8	22·53	25·08	25·48	29·74
4·9	22·03	24·51	24·91	29·07
5·0	21·56	23·98	24·36	28·44
5·1	21·08	23·46	23·84	27·83
5·2	20·64	22·97	23·34	27·24
5·3	20·22	22·50	22·86	26·68
5·4	19·81	22·05	22·40	26·14
5·5	19·42	21·61	21·96	25·63
5·6	19·04	21·19	21·53	25·13
5·7	18·68	20·79	21·12	24·66
5·8	18·33	20·40	20·73	24·20
5·9	18·00	20·03	20·35	23·75
6·0	17·67	19·67	19·98	23·33
7·0	14·99	16·68	16·95	19·78
8·0	13·02	14·48	14·72	17·18
9·0	11·50	12·80	13·00	15·18
10·0	10·31	11·47	11·65	13·60

Digitized by Google

If the spin of the projectile died away more rapidly than the forward velocity, the projectile, like the top, would again become unsteady.

But the forward retardation of the shot is much greater than the angular retardation, so that the shot moves as if on an increasing screw; and practically, if once steady, the shot will continue so throughout its trajectory, in consequence of this *overscrew*.

In high angle fire, however, the motion tends to become unsteady in the descending branch, in consequence of the great curvature of the trajectory.

Drift.

This is an effect observable with all rifled guns, by which the shot is deflected in its flight more or less from the vertical plane of fire; the deflection is to the right when the gun is rifled with a twist on a right-handed screw, to the left with a left-handed twist.

Thus it was found by Mr. Rigby, Superintendent R.S.A.F., Enfield, that with two barrels rifled with right- and left-handed twists, and laid parallel, the bullets struck on a target at 1000 yards on an average 15 inches farther apart than the muzzles, showing that the *drift* of the rifle bullet at this range is about $7\frac{1}{2}$ inches.

The drift increases rapidly with the elevation and range of the gun; thus it was found that the 9·2-inch fired at Shoeburyness with an elevation of 40° and a muzzle velocity of 2375 f/s, sent a shot weighing 380 lbs. to a range of 20,000 yards, and that the drift was about 1,000 yards to the right of the vertical plane of fire.

Disregarding theories and explanations, the established facts connected with drift are as follows:—With service projectiles having pointed heads and right-handed rotation, the drift is to the right; other things remaining unchanged, it is found that the greater the twist the greater the drift; the smooth and well-centred B.L. projectiles drift less than the M.L. shells, which are roughened by studs; at extreme ranges the drift always increases rapidly, and the projectile becomes unsteady in flight, owing to the greater curvature of the trajectory.

The minor effects of the resistance of the air and of the rotation of the projectile cause the axis of the latter to remain with the axis of the shot nearly tangential to the trajectory, but with the point of the projectile a little above and to the right of the vertical plane of fire; this is verified from the fact that the holes made in wooden targets are as nearly as possible circular, even when the angle of descent is considerable, and also from watching by eye the behaviour of projectiles fired with low velocities (500—600 f/s) at considerable elevations (50—70°).

Wind Deflection.

To begin with, elongated rifled projectiles will not be considered; the elementary case of a spherical ball projected from a smooth bore gun into a cross wind will be taken instead.

In the first place, assume that there is no gravity, no air resistance and no wind, then the velocity V f/s will carry the shot from the muzzle O in the time of flight t to A in a straight line $OA = Vt$.

Now suppose there is a wind shown by the weathercock, in the direction BA of velocity W f/s; measure off $AB = Wt$; then OB

Digitized by Google

will be the direction of the shot *through the air;* and, with respect to the air, the shot will have reached the point B in the air in the time t.

Fig. 2.

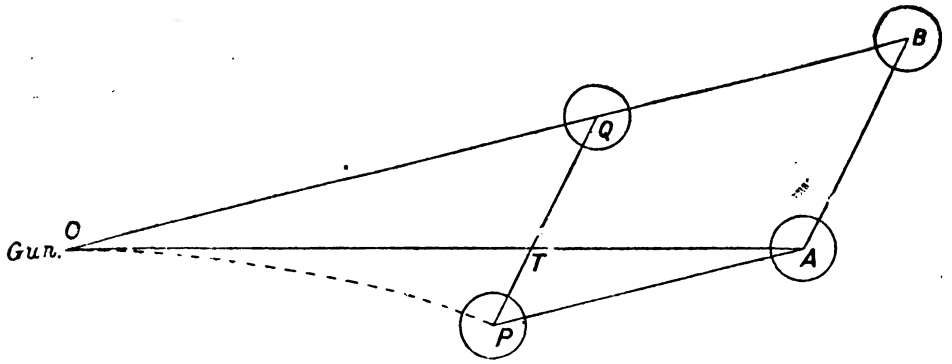

But air always offers a resistance; so, suppose that in t secs. the shot has moved through the air a distance OQ, less than OB. Draw QP equal and parallel to BA; then QP is the "air drift" in the time t, so that the shot will be found at a point P over the ground and TP is the deviation due to the wind.

The path of the shot over the ground is now a curved track OP, shown by the dotted line.

The wind deflection TP at a range OT of R yards or 3R feet is thus,

$$\begin{aligned} TP = AB - TQ &= AB\left(1 - \frac{TQ}{AB}\right), \\ &= AB\left(1 - \frac{OT}{OA}\right), \\ &= Wt\left(1 - \frac{3R}{Vt}\right) = W\left(t - \frac{3R}{V}\right), \\ &= W(t - T), \end{aligned}$$

where $T = \frac{3R}{V}$ is the time of flight over the range R yards with undiminished velocity V; $t - T$ may be called the lag or "air delay" over the range; so that the wind deflection is the same as the air drift during the delay $t - T$. This delay is large when the retardation of the shot is large in consequence of the smallness of the ballistic coefficient, as in small arm bullets; the delay diminishes as the ballistic coefficient increases with the size of the gun in artillery fire; the delay would be zero, and the wind deflection zero also in a gun with very large ballistic coefficient.

So far, a round shot only has been considered; this experiences the same resistance whichever way it is projected.

When an elongated projectile is projected over the ground with its axis along OA, then relatively to the air it is projected with an additional broadside velocity due to the wind.

Digitized by Google

In consequence of this broadside motion the shot will perform gyrations in the air round the line OB due to the spin imparted by the rifling. These gyrations die out rapidly from the frictional damping of the air, and with appropriate rifling the shot soon settles down to a steady progression through the air in the direction OB, so the theory for a round shot is equally applicable to an elongated projectile fired from a rifled gun.

With a wind across the range the deflection TP is lateral, and the alteration of range from OT to OP is practically insensible and no alteration of sighting elevation is required.

But with a wind very nearly up or down the range, the deflection TP is chiefly in range, so that an additional investigation is required of the motion of the shot in a vertical plane, and of the alteration in elevation required to correct the error in range TP, or height of impact on a vertical target; the investigation of this is reserved for Part II.

EXAMPLES.

Calculate the lateral effect of a wind of 20 f/s blowing in a direction which makes an angle of 30° with the line of fire, at a range of 2,000 yards; of

(i) a 6-inch B.L. gun, C = 3·00, V = 2000 f/s.
(ii) a 0·303 rifle, C = 0·417, V = 2000 f/s.

The velocity of the wind directly across the line of fire is

$$20 \times \sin 30° = 10 \text{ f/s},$$

so that here

$$W = 10.$$

Employing the formula

$$\text{Deflection} = W\left(t - \frac{3R}{V}\right) \text{ feet},$$

we find t from the formulæ

$$S_s = S_V - \frac{3R}{C},$$

$$t = C\,(T_V - T_v),$$

using Bashforth's tables.

V = 2000 f/s.	i.	ii.
s	6000 feet	6000 feet
$\frac{s}{C}$	2000	14390
S_{2000}	45207·1	45207·1
S_s	43207·1	30817·1
v	1510	569

Digitized by Google

$V = 2000$ f/s.	i.	ii.
T_{2000}	233·4956	233·4956
T_v	232·3424	217·2953
$\frac{t}{C}$	1·1532	16·2003
t	3·46	6·754
$3R/V$	3·00	3·00
$W\left(t - \frac{3R}{V}\right)$	4·6 feet	37·54 feet,

so that the deflection amounts to

$4\frac{1}{2}$ feet for the 6-inch projectile,

$37\frac{1}{2}$ feet for the ·303 bullet.

Digitized by Google

Digitized by Google

GUNNERY TABLES.

CONTENTS.

TABLE		PAGE
I.	Values of Bashforth's K	194
II.	The Resistance of the Air to a 1-inch Projectile ..	195
III.	Ballistic Table for Time in Seconds and Velocity ..	196
IV.	Ballistic Table for Distance in Feet and Velocity ..	201
V.	Ballistic Table for Deviation in Degrees and Velocity	206
VI.	Table for I	210
VII.	Table for A	216
VIII.	Table for *i*	222
IX.	Ballistic Table for Spherical Projectiles	223
X.	Table, in double entry, for Range and Elevation ..	226
XI.	Correction for Density of the Air	232
XII.	Conversion of Measures	233
XIII.	Work capable of being done by exploding Gunpowder	235
XIV.	Four-figure Logarithms	236
XV.	Numbers to Four-figure Logarithms	238
XVI.	Log. Sines, &c.	240

Digitized by Google

TABLE I.

Values of K for Ogival-headed Projectiles of $1\frac{1}{2}$ diameters for the cubic law of resistance of the air.

(From Supplement *Bashforth's Motion of Projectiles*, 1881.)

v.	K.	v.	K.	v.	K.	v.	K.	v.	K.
f/s.		f/s.		f/s.		f/s.		f/s.	
100	578·1	640	93·5	1180	109·6	1720	81·8	2260	66·5
110	525·5	650	91·1	1190	109·6	1730	81·2	2270	66·4
120	481·7	660	90·5	1200	109·6	1740	80·6	2280	66·2
130	444·7	670	89·1	1210	109·6	1750	80·0	2290	65·9
140	412·9	680	87·7	1220	109·6	1760	79·5	2300	65·5
150	385·4	690	86·3	1230	109·5	1770	78·9	2310	65·0
160	361·3	700	84·9	1240	109·5	1780	78·4	2320	64·4
170	340·1	710	83·7	1250	109·4	1790	77·8	2230	63·8
180	321·2	720	82·6	1260	109·3	1800	77·3	2340	63·2
190	304·3	730	81·6	1270	109·2	1810	76·8	2350	62·6
200	289·0	740	80·6	1280	109·0	1820	76·2	2360	62·0
210	275·3	750	79·6	1290	108·8	1830	75·7	2370	61·4
220	262·8	760	78·7	1300	108·6	1840	75·2	2380	60·8
230	251·3	770	78·0	1310	108·4	1850	74·7	2390	60·2
240	240·9	780	77·4	1320	108·1	1860	74·2	2400	59·6
250	231·2	790	76·8	1330	107·8	1870	73·6	2410	59·0
260	222·4	800	76·2	1340	107·5	1880	73·1	2420	58·4
270	214·1	810	75·6	1350	107·1	1890	72·6	2430	57·8
280	206·5	820	75·2	1360	107·7	1900	72·1	2440	57·2
290	199·3	330	75·1	1370	107·3	1910	71·6	2450	56·7
300	192·7	840	75·0	1380	107·8	1920	71·2	2460	56·2
310	186·5	850	75·0	1390	105·3	1930	70·8	2470	55·7
320	180·8	860	75·0	1400	104·7	1940	70·4	2480	55·2
330	175·5	870	75·0	1410	104·1	1950	70·0	2490	54·8
340	170·6	880	75·0	1420	103·5	1960	69·7	2500	54·4
350	166·0	890	75·0	1430	102·9	1970	69·4	2510	54·0
360	161·9	900	75·0	1440	102·3	1980	69·2	2520	53·7
370	158·0	910	75·0	1450	101·6	1990	69·0	2530	53·4
380	154·4	920	75·0	1460	100·9	2000	68·8	2540	53·1
390	151·1	930	75·0	1470	100·1	2010	68·6	2550	52·9
400	148·0	940	75·0	1480	99·4	2020	68·4	2560	52·7
410	145·2	950	75·0	1490	98·6	2030	68·3	2570	52·6
420	142·5	960	75·0	1500	97·9	2040	68·2	2580	59·5
430	139·8	970	75·0	1510	97·1	2050	68·1	2590	52·5
440	137·2	980	75·0	1520	96·2	2060	68·0	2600	52·4
450	134·6	990	75·0	1530	95·3	2070	67·9	2610	52·4
460	132·0	1000	75·0	1540	94·4	2080	67·9	2620	52·4
470	129·4	1010	75·1	1550	93·6	2090	67·8	2630	52·8
480	126·9	1020	75·3	1560	92·8	2100	67·8	2640	52·3
490	124·4	1030	76·7	1570	92·0	2110	67·7	2650	52·3
500	121·9	1040	80·8	1580	91·2	2120	67·6	2660	52·2
510	119·6	1050	87·3	1590	90·4	2130	67·6	2670	52·2
520	117·3	1060	94·0	1600	89·7	2140	67·5	2680	52·2
530	115·0	1070	98·7	1610	89·0	2150	67·4	2690	52·1
540	112·8	1080	102·2	1620	88·3	2160	67·3	2700	52·1
550	110·7	1090	104·9	1630	87·6	2170	67·2	2710	52·1
560	108·7	1100	106·9	1640	86·9	2180	67·2	2720	52·0
570	106·7	1110	108·4	1650	86·2	2190	67·1	2730	52·0
580	104·6	1120	109·2	1660	85·5	2200	67·0	2740	52·0
590	102·5	1130	109·6	1670	84·8	2210	66·9	2750	52·0
600	100·5	1140	109·6	1680	84·2	2220	66·8	2760	52·0
610	98·6	1150	109·6	1690	83·6	2230	66·8	2770	52·0
620	96·8	1160	109·6	1700	83·0	2240	66·7	2780	52·0
630	95·1	1170	109·6	1710	82·4	2250	66·6	2800	52·0

Digitized by Google

Table II.

Showing the Resistance of the Air in pounds (p) to a 1-inch Projectile with an Ogival head of $1\frac{1}{2}$ diameters radius under standard conditions of shape, steadiness, and density of air, for velocities from 100 to 2800 f/s.

Calculated by Mr. A. G. Hadcock, late R.A., from Mr. Bashforth's values of K, by the use of the formula

$$p = \frac{K}{g}\left(\frac{v}{1000}\right)^3 = \frac{k}{g}\left(\frac{v}{1000}\right)^2.$$

v	p	v	p	v	p	v	p	v	p
f/s.	lbs.	f/s.	lbs.	f/s.	lbs.	f/s.	lbs.	f/s.	lbs.
100	0·0180	640	0·7615	1180	5·594	1720	12·900	2260	23·848
110	0·0217	650	0·7840	1190	5·738	1730	13·059	2270	24·132
120	0·0259	660	0·8081	1200	5·884	1740	13·191	2280	24·368
130	0·0303	670	0·8325	1210	6·032	1750	13·318	2290	24·583
140	0·0352	680	0·8565	1220	6·183	1760	13·466	2300	24·760
150	0·0404	690	0·8807	1230	6·331	1770	13·591	2310	24·887
160	0·0459	700	0·9048	1240	6·486	1780	13·733	2320	24·987
170	0·0519	710	0·9306	1250	5·637	1790	13·862	2330	25·071
180	0·0582	720	0·9577	1260	6·791	1800	14·002	2340	25·152
190	0·0648	730	0·9861	1270	6·948	1810	14·149	2350	25·242
200	0·0718	740	1·0146	1280	7·101	1820	14·269	2360	25·316
210	0·0792	750	1·0433	1290	7·256	1830	14·414	2370	25·386
220	0·0869	760	1·0733	1300	7·413	1840	14·552	2380	25·467
230	0·0950	770	1·1062	1310	7·569	1850	14·696	2390	25·529
240	0·1035	780	1·1408	1320	7·723	1860	14·832	2400	25·588
250	0·1122	790	1·1764	1330	7·879	1870	14·849	2410	25·658
260	0·1214	800	1·2119	1340	8·034	1880	15·090	2420	25·710
270	0·1310	810	1·248	1350	8·185	1890	15·224	2430	25·772
280	0·1409	820	1·288	1360	8·339	1900	15·364	2440	25·814
290	0·1511	830	1·334	1370	8·490	1910	15·496	2450	25·898
300	0·1616	840	1·381	1380	8·639	1920	15·656	2460	26·008
310	0·1727	850	1·431	1390	8·784	1930	15·809	2470	26·071
320	0·1841	860	1·482	1400	8·924	1940	15·968	2480	26·158
330	0·1959	870	1·534	1410	9·066	1950	16·127	2490	26·276
340	0·2083	880	1·588	1420	9·206	1960	16·302	2500	26·406
350	0·2211	890	1·643	1430	9·349	1970	16·484	2510	26·534
360	0·2346	900	1·699	1440	9·489	1980	16·689	2520	26·709
370	0·2485	910	1·756	1450	9·622	1990	16·888	2530	26·866
380	0·2631	920	1·814	1460	9·753	2000	17·096	2540	27·039
390	0·2794	930	1·874	1470	9·879	2010	17·305	2550	27·243
400	0·2943	940	1·935	1480	10·013	2020	17·515	2560	27·464
410	0·3110	950	1·998	1490	10·133	2030	17·752	2570	27·736
420	0·3280	960	2·061	1500	10·263	2040	17·990	2580	27·010
430	0·3453	970	2·127	1510	10·384	2050	18·229	2590	28·337
440	0·3630	980	2·193	1520	10·493	2060	18·463	2600	28·613
450	0·3810	990	2·261	1530	10·601	2070	18·706	2610	28·945
460	0·3992	1000	2·330	1540	10·712	2080	18·978	2620	29·279
470	0·4174	1010	2·404	1550	10·829	2090	19·227	2630	29·562
480	0·4360	1020	2·482	1560	10·945	2100	19·504	2640	29·899
490	0·4547	1030	2·604	1570	11·060	2110	19·755	2650	30·241
500	0·4734	1040	2·823	1580	11·175	2120	20·010	2660	30·527
510	0·4928	1050	3·139	1590	11·288	2130	20·294	2670	30·873
520	0·5124	1060	3·478	1600	11·416	2140	20·551	2680	31·221
530	0·5318	1070	3·756	1610	11·540	2150	20·811	2690	31·494
540	0·5517	1080	3·999	1620	11·662	2160	21·072	2700	31·846
550	0·5721	1090	4·221	1630	11·784	2170	21·336	2710	32·203
560	0·5931	1100	4·420	1640	11·909	2180	21·633	2720	32·500
570	0·6139	1110	4·605	1650	12·030	2190	21·889	2730	32·859
580	0·6349	1120	4·766	1660	12·150	2200	22·158	2740	33·222
590	0·6539	1130	4·913	1670	12·268	2210	22·429	2750	33·586
600	0·6743	1140	5·041	1680	12·404	2220	22·702	2760	33·955
610	0·6952	1150	5·179	1690	12·536	2230	23·010	2770	34·325
620	0·7166	1160	5·315	1700	12·666	2240	23·288	2780	34·697
630	0·7386	1170	5·454	1710	12·801	2250	23·566	2800	35·453

Digitized by Google

Table III.

Time t in seconds, between velocities V and v f/s,

$$t = C\,(T_V - T_v).$$

(From Supplement *Bashforth's Motion of Projectiles*, 1881.)

v.	0	1	2	3	4	5	6	7	8	9	Diff.
f/s.	secs.	secs.	secs.	secs.	secs.	secs.	secs.	secs.	secs.	secs.	+
10	75·399	77·111	78·790	80·437	82·052	83·636	85·190	86·715	88·212	89·682	1·584
11	91·125	92·542	93·934	95·301	96 644	97·964	99·261	00·536*	01·789*	03·021*	1·320
12	1 04·232	05·423	06·595	07·748	08·883	09·999	11·097	12·178	13·243	14·291	1·116
13	1 15·323	16·339	17·340	18·326	19·297	20·254	21·196	22·124	23·039	23·941	·957
14	24·830	25·706	26·570	27·422	28·262	29·091	29·908	30·714	31·509	32·294	·829
15	33·068	33·832	34·586	35·331	36·066	36·792	37·508	38·215	38·913	39·602	·726
16	1 40·283	40·955	41·618	42·273	42·920	43·559	44·190	44·813	45·429	46·038	·639
17	46·640	47·235	47·823	48·404	48·978	49·546	50·107	50·662	51·211	51·754	·568
18	52·291	52·822	53·347	53·867	54·381	54·890	55·393	55·890	56·382	56·869	·509
19	1 57·351	57·828	58·300	58·767	59·229	59·686	60·138	60·586	61·029	61·468	·457
20	61·902	62·332	62·758	63·180	63·598	64·012	64·422	64·828	65·230	65 628	·414
21	66·022	66·412	66·798	67·181	67·560	67·936	68·308	68·676	69·041	69·403	·376
22	1 69·762	70·118	70·470	70·819	71·165	71·508	71·848	72·185	72·519	72·850	·343
23	73·179	73·505	73·828	74·148	74·465	74·780	75·092	75·401	75·708	76·012	·315
24	76·314	76·613	76·909	77·203	77·494	77·783	78·070	78·354	78·636	78·916	·289
25	1 79·194	79·470	79·743	80·014	80·283	80·550	80·815	81·078	81·339	81·598	·267
26	81·855	82·110	82·363	82·614	82·863	83·110	83·355	83·598	83·839	84·079	·247
27	84·317	84·553	84·787	85·020	85·251	85·481	85·709	85·935	86·160	86·382	·230
28	1 86·604	86·824	87·042	87·259	87·474	87·688	87·900	88·111	88·320	88·528	·214
29	88·734	88 939	89·143	89·345	89·546	89·745	89·943	90·140	90·335	90·529	·199
30	90·721	90·912	91·102	91·291	91·478	91·664	91·849	92·033	92·216	92·397	·186
31	1 92·577	92·756	92·934	93·111	93·287	93·461	93·634	93·806	93·971	94·147	·174
32	94·316	94·484	94·651	94·817	94·982	95·146	95·309	95·471	95·632	95·792	·164
33	95·951	96·109	96·266	96·422	96·577	96·731	96·884	97·036	97·187	97·338	·154
34	1 97·488	97·637	97·785	97·932	98·078	98·223	98·367	98·510	98·652	98·794	·145
35	98·935	99·075	99·214	99·352	99·490	99·627	99·763	99·898	00·032*	00·166*	·137
36	2 00·299	00·431	00·562	00·692	00·822	00·951	01·079	01·206	01·333	01·459	·129
37	2 01·585	01·710	01·834	01·957	02·080	02·202	02·323	02·443	02·563	02·682	·122
38	02 801	02·919	03·036	03·152	03·268	03·383	03·497	03·610	03·723	03·835	·115
39	03 947	04·058	04·168	04·278	04·387	04·496	04·604	04·711	04·818	04·924	·109
40	20 5·0299	5·1349	5·2393	5·3432	5·4466	5·5494	5·6517	5·7534	5·8546	5·9553	·1028
41	6·0554	6·1550	6·2540	6·3525	6 4505	6·5480	6·6450	6·7414	6·8373	6·9327	·0975
42	7·0276	7·1220	7·2159	7·3093	7·4022	7·4947	7·5867	7·6782	7·7693	7·8599	·0925
43	20 7·9501	8·0398	8·1291	8·2179	8·3063	8·3942	8·4817	8·5687	8·6553	8·7415	·0879
44	8·8272	8·9125	8·9974	9·0819	9·1660	9·2497	9·3330	9·4159	9·4984	9·5805	·0837
45	9·6622	9·7435	9·8244	9·9050	9·9852	0·0651*	0·1446*	*0·2237	0·3025*	0·3809*	·0799
46	21 0·4590	0·5367	0·6140	0·6910	0·7677	0·8440	0·9200	0·9956	1·0709	1·1459	·0763
47	1·2205	1·2948	1·3687	1·4423	1·5156	1·5886	1·6613	1·7336	1·8056	1·8773	·0730
48	1·9487	2·0198	2·0906	2·1611	2·2313	2·3012	2·3708	2·4401	2·5091	2·5779	·0699
49	21 2·6464	2·7146	2·7825	2·8501	2·9174	2·9845	3·0513	3·1178	3·1841	3·2501	·0671
50	3·3159	3·3814	3·4466	3·5116	3·5763	3·6608	3·7050	3·7689	3·8326	3·8960	·0645
51	3·9592	4·0221	4·0848	4·1472	4·2094	4·2713	4·3330	4·3944	4·4556	4·5165	·0619
52	21 4·5772	4·6377	4·6979	4·7579	4·8177	4·8773	4·9367	4·9958	5·0547	5·1134	·0596
53	5·1719	5·2302	5·2882	5·3460	5·4036	5·4610	5·5182	5·5752	5·6320	5·6886	·0574
54	5·7450	5·8012	5·8572	5·9130	5·9686	6·0240	6·0792	6·1342	6·1890	6·2436	·0554
55	21 6·2980	6·3522	6·4062	6·4600	6·5136	6·5670	6·6202	6·6732	6 7260	6·7786	·0534
56	6·8311	6·8834	6·9355	6·9874	7·0391	7·0907	7·1421	7·1933	7·2444	7·2953	·0516
57	7·3460	7·3965	7·4469	7·4971	7·5471	7·5970	7·6467	7·6962	7·7456	7·7948	·0499
58	21 7·8438	7·8928	7·9417	7·9904	8·0389	8·0873	8·1356	8·1837	8·2316	8·2793	·0483
59	8·3271	8·3746	8·4220	8·4692	8·5163	8·5632	8·6100	8 6566	8·7031	8·7494	·0468
60	8·7957	8·8417	8·8877	8·9334	8·9791	9·0246	9·0700	9·1152	9·1603	9·2052	·0454
61	21 9·2501	9·2947	9·3393	9·3837	9·4280	9·4721	9·5161	9·5600	9·6037	9·6473	·0441
62	9·6908	9·7341	9·7773	9·8204	9·8633	9·9062	9·9489	9·9914	*0·0338	0·0761*	·0428
63	22 0·1183	0·1604	0·2023	0·2441	0·2858	0·3273	0·3687	0·4100	0·4512	0·4922	·0415

Digitized by Google

TABLE III—*continued.*

$t = C (T_Y - T_v)$.

v.	0	1	2	3	4	5	6	7	8	9	Diff.
f/s.	secs.	secs.	secs.	secs.	secs.	secs.	secs.	secs.	secs.	secs.	+
64	22 0·5332	0·5740	0·6147	0·6552	0·6957	0·7360	0·7762	0·8163	0·8563	0·8962	·040
65	0·9359	0·9755	1·0151	1·0544	1·0937	1·1328	1·1718	1·2107	1·2495	1·2881	·039
66	1·3267	1·3651	1·4034	1 4416	1·4797	1·5177	1·5555	1·5933	1·6309	1·6684	·037
67	22 1·7059	1·7432	1·7804	1·8175	1·8545	1·8914	1·9281	1·9648	2·0014	2·0378	·036
68	2·0742	2·1105	2·1466	2·1827	2·2186	2·2545	2·2902	2·3259	2·3614	2 3969	·035
69	2·4322	2·4675	2·5027	2·5377	2·5727	2·6076	2·6424	2·6771	2·7117	2·7462	·034
70	22 2·7806	2·8150	2·8492	2·8833	2·9174	2·9513	2·9852	3·0189	3·0526	3·0862	·033
71	3·1196	3·1530	3·1863	3·2195	3·2526	3·2856	3·3185	3·3513	3·3840	3·4167	·033
72	3·4492	3·4816	3·5140	3·5462	3·5784	3·6105	3·6424	3·6743	3·7061	3·7378	·032
73	22 3·7694	3·8009	3·8323	3 8636	3·8949	3·9260	3·9571	3·9881	4·0189	4·0497	·031
74	4·0804	4·1110	4·1416	4·1720	4·2024	4·2326	4·2628	4·2929	4·3230	4·3529	·030
75	4·3828	4·4125	4·4422	4·4719	4·5014	4·5308	4·5602	4·5895	4·6187	4·6478	·029
76	22 4·6769	4·7058	4·7347	4 7635	4·7922	4·8208	4·8493	4·8777	4·9060	4·9343	·028
77	4·9624	4 9905	5·0185	5·0464	5·0742	5·1020	5·1296	5·1572	5·1847	5·2121	·027
78	5·2394	5·2666	5·2937	5·3208	5·3478	5·3747	5·4015	5·4282	5·4549	5·4814	·026
79	22 5·5079	5·5343	5·5606	5·5869	5·6130	5·6391	5·6652	5·6911	5·7170	5·7428	·026
80	5·7685	5·7941	5·8197	5·8452	5·8706	5·8959	5·9212	5·9463	5·9714	5·9965	·025
81	6·0214	6·0463	6·0711	6·0959	6·1205	6·1451	6·1696	6·1941	6·2184	6·2427	·024
82	22 6·2669	6·2910	6·3151	6·3390	6·3629	6·3867	6·4104	6·4340	6·4576	6·4810	·0237
83	6·5044	6·5277	6·5509	6·5740	6·5971	6·6201	6·6430	6·6658	6·6885	6·7111	·022
84	6·7337	6·7562	6·7786	6·8009	6·8232	6·8454	6·8675	6·8895	6·9114	6·9333	·0221
85	22 6·9551	6·9768	6·9984	7·0200	7·0415	7·0629	7·0842	7·1055	7·1267	7·1478	·0214
86	7·1688	7·1898	7·2107	7·2315	7·2522	7·2729	7·2935	7·3140	7·3345	7·3549	·0206
87	7·3752	7·3954	7·4156	7·4357	7·4558	7·4757	7·4956	7·5155	7·5353	7·5550	·0199
88	22 7·5746	7·5942	7·6137	7·6332	7·6526	7·6719	7·6912	7·7104	7·7295	7·7486	·0193
89	7·7677	7·7866	7·8055	7·8244	7·8431	7·8618	7·8805	7·8991	7·9176	7·9360	·0187
90	7·9544	7·9727	7·9909	8·0091	8·0272	8·0452	8·0632	8·0812	8·0990	8·1168	·0180
91	22 8·1346	8·1523	8·1699	8·1875	8·2050	8·2225	8·2399	8·2573	8·2746	8·2918	·0174
92	8·3090	8·3261	8·3432	8·3602	8·3772	8·3941	8·4109	8·4277	8·4445	8·4611	·0169
93	8·4778	8·4943	8·5109	8·5273	8·5437	8·5601	8·5764	8·5927	8·6089	8·6250	·0163
94	22 8·6411	8·6572	8·6782	8·6892	8·7051	8·7209	8·7367	8·7525	8·7682	8·7838	·0158
95	8·7994	8·8150	8·8305	8·8459	8·8613	8·8767	8·8920	8·9073	8·9225	8·9376	·0153
96	8·9528	8·9678	8·9828	8·9978	9·0128	9·0276	9·0425	9·0573	9·0720	9·0867	·0149
97	22 9·1014	9·1160	9·1306	9·1451	9·1595	9·1740	9·1884	9·2027	9·2170	9·2312	·0144
98	9·2454	9·2596	9·2737	9·2878	9·3018	9·3158	9·3298	9·3437	9·3575	9·3713	·0140
99	9·3851	9·3989	9·4126	9·4262	9·4398	9·4534	9·4670	9·4805	9·4939	9·5073	·0136
100	22 9·5207	9·5340	9·5473	9·5606	9·5738	9·5869	9·6001	9·6132	9·6262	9·6392	·0132
101	9·6522	9·6651	9·6780	9·6908	9·7036	9·7164	9·7291	9·7418	9·7544	9·7670	·0127
102	9·7796	9·7921	9·8046	9·8170	9·8294	9·8417	9·8540	9·8662	9·8783	9·8904	·0123
103	22 9·9024	9·9144	9·9262	9·9380	9·9496	9·9612	9·9727	9·9841	9·9954	0·0066*	·0115
104	23 0·0177	0·0287	0·0396	0·0504	0·0610	0·0716	0·0820	0·0923	0·1025	0·1126	·0105
105	0·1226	0·1325	0·1423	0·1520	0·1615	0·1710	0·1804	0·1897	0·1988	0·2079	·0094
106	23 0·2170	0·2259	0·2347	0·2435	0·2522	0·2609	0·2694	0·2780	0·2864	0·2948	·0086
107	0·3031	0·3114	0·3196	0·3278	0·3359	0·3439	0·3520	0·3599	0·3678	0·3757	·0080
108	0·3835	0·3913	0·3990	0·4067	0·4143	0·4219	0·4295	0·4370	0·4445	0·4519	·0076
109	23 0·4593	0·4667	0·4740	0·4813	0·4885	0·4958	0·5030	0·5101	0·5172	0·5243	·0072
110	0·5314	0·5384	0·5454	0·5524	0·5593	0·5662	0·5731	0·5800	0·5868	0·5936	·0069
111	0·6004	0·6071	0·6139	0·6206	0·6272	0·6339	0·6405	0·6471	0·6537	0·6603	·0066
112	23 0·6668	0·6733	0·6798	0·6863	0·6928	0·6992	0·7056	0·7120	0·7184	0·7248	·0064
113	0·7311	0·7374	0·7437	0·7500	0·7563	0·7625	0·7688	0·7750	0·7812	0·7874	·0062
114	0·7936	0·7997	0·8059	0·8120	0·8181	0·8242	0·8303	0·8364	0·8424	0·8484	·0061
115	23 0·8545	0·8605	0·8665	0·8726	0·8787	0·8847	0·8906	0·8965	0·9024	0·9083	·0059
116	0·9142	0·9200	0·9259	0·9317	0 9375	0·9433	0·9490	0·9548	0·9605	0·9663	·0058
117	0·9720	0·9777	0·9833	0·9890	0·9947	1·0003	1·0059	1·0115	1·0171	1·0227	·0056
118	23 1·0283	1·0338	1·0394	1·0449	1·0504	1·0559	1·0614	1·0669	1·0723	1·0778	·0055
119	1·0832	1·0886	1·0940	1·0994	1·1048	1·1101	1·1154	1·1208	1·1261	1·1314	·0054
120	1·1367	1·1420	1·1473	1·1525	1·1578	1·1630	1·1682	1·1734	1·1786	1·1838	·0052
121	23 1·1889	1·1941	1·1992	1·2043	1·2095	1·2146	1·2196	1 2247	1·2298	1·2348	·0051
122	1·2399	1·2449	1·2499	1·2549	1·2599	1·2649	1·2698	1·2748	1·2797	1·2847	·0050
123	1·2896	1·2945	1·2994	1·3043	1·3091	1·3140	1·3188	1 3237	1·3285	1·3333	·0049

Digitized by Google

TABLE III—*continued.*

$t = C\ (T_r - T_v)$.

v.	0	1	2	3	4	5	6	7	8	9	Diff.
f/s.	secs.	secs.	secs.	secs.	secs.	secs.	secs.	secs.	secs.	secs.	+
124	23 1·3381	1·3429	1·3477	1·3524	1·3572	1·3619	1·3667	1·3714	1·3761	1·3808	·0047
125	1·3855	1·3902	1·3948	1·3995	1·4041	1·4088	1·4134	1·4180	1·4226	1·4272	·0046
126	1·4318	1·4364	1·4410	1·4455	1·4501	1·4546	1·4591	1·4636	1·4681	1·4726	·0045
127	23 1·4771	1·4816	1·4860	1·4905	1·4949	1·4993	1·5038	1·5082	1·5126	1·5170	·0044
128	1·5214	1·5257	1·5301	1·5345	1·5388	1·5431	1·5475	1·5518	1·5561	1·5604	·0043
129	1·5647	1·5690	1·5732	1·5775	1·5818	1·5860	1·5902	1·5945	1·5987	1·6029	·0042
130	23 1·6071	1·6113	1·6155	1·6196	1·6238	1·6280	1·6321	1·6362	1·6404	1·6445	·0042
131	1·6486	1·6527	1·6568	1·6609	1·6650	1·6690	1·6731	1·6772	1·6812	1·6852	·0041
132	1·6893	1·6933	1·6973	1·7013	1·7053	1·7093	1·7133	1·7173	1·7212	1·7252	·0040
133	23 1·7291	1·7331	1·7370	1·7410	1·7449	1·7488	1·7527	1·7566	1·7605	1·7644	·0039
134	1·7682	1·7721	1·7760	1·7798	1·7837	1·7875	1·7913	1·7952	1·7990	1·8028	·0038
135	1·8066	1·8104	1·8142	1·8179	1·8217	1·8255	1·8292	1·8330	1·8367	1·8405	·0038
136	23 1·8442	1·8479	1·8517	1·8554	1·8591	1·8628	1·8665	1·8702	1·8738	1·8775	·0037
137	1·8812	1·8848	1·8885	1·8921	1·8958	1·8994	1·9030	1·9067	1·9103	1·9139	·0036
138	1·9175	1·9211	1·9247	1·9282	1·9318	1·9354	1·9390	1·9425	1·9461	1·9496	·0036
139	23 1·9532	1·9567	1·9602	1·9638	1·9673	1·9708	1·9743	1·9778	1·9813	1·9848	·0035
140	1·9883	1·9918	1·9952	1·9987	2·0022	2·0056	2·0091	2·0125	2·0160	2·0194	·0035
141	2·0228	2·0263	2·0297	2·0331	2·0365	2·0399	2·0433	2·0467	2·0501	2·0535	·0034
142	23 2·0569	2·0602	2·0636	2·0670	2·0703	2·0737	2·0770	2·0804	2·0837	2·0870	·0034
143	2·0904	2·0937	2·0970	2·1003	2·1036	2·1069	2·1102	2·1135	2·1168	2·1201	·0033
144	2·1234	2·1267	2·1299	2·1332	2·1364	2·1397	2·1430	2·1462	2·1494	2·1527	·0033
145	23 2·1559	2·1591	2·1624	2·1656	2·1688	2·1720	2·1752	2 1784	2·1816	2·1848	·0032
146	2·1880	2·1912	2·1944	2·1975	2·2007	2·2039	2·2071	2·2102	2·2134	2·2165	·0032
147	2·2197	2·2228	2·2260	2·2291	2·2322	2·2354	2·2385	2·2416	2·2447	2·2478	·0031
148	23 2·2509	2·2540	2·2571	2·2602	2·2633	2·2664	2·2695	2·2726	2·2757	2·2787	·0031
149	2·2818	2·2849	2·2879	2·2910	2·2940	2·2971	2·3001	2·3032	2·3062	2·3093	·0030
150	2·3123	2·3153	2·3183	2·3214	2·3244	2·3274	2·3304	2·3334	2·3364	2·3394	·0030
151	23 2·3424	2·3454	2·3484	2·3514	2·3543	3·3573	2·3603	2·3633	2·3662	2·3692	·0030
152	2·3722	2·3751	2·3781	2·3810	2·3840	2·3869	2·3899	2·3928	2·3958	2·3987	·0029
153	2·4016	2·4046	2·4075	2·4104	2·4133	2·4162	2·4192	2·4221	2·4250	2·4279	·0029
154	23 2·4308	2·4337	2·4366	2·4395	2·4424	2·4453	2·4481	2·4510	2·4539	2·4568	·0029
155	2·4597	2·4625	2·4654	2·4683	2·4711	2·4740	2·4768	2·4797	2·4825	2·4854	·0029
156	2·4882	2·4911	2·4939	2·4967	2·4996	2·5024	2·5052	2·5080	2·5108	2·5137	·0028
157	23 2·5165	2·5193	2·5221	2·5249	2·5277	2·5305	2·5333	2·5361	2·5389	2·5416	·0028
158	2·5444	2·5472	2·5500	2·5528	2·5555	2·5583	2·5611	2·5638	2·5666	2·5693	·0028
159	2·5721	2·5748	2·5776	2·5803	2·5831	2·5858	2·5885	2·5913	2·5940	2·5967	·0027
160	23 2·5994	2·6022	2·6049	2·6076	2·6103	2·6130	2·6157	2·6184	2·6211	2·6238	·0027
161	2·6265	2·6292	2·6319	2·6346	2·6373	2·6400	2·6426	2·6453	2·6480	2·6506	·0027
162	2·6533	2·6560	2·6586	2·6613	2·6640	2·6666	2·6693	2·6719	2·6745	2·6772	·0026
163	23 2·6798	2·6825	2·6851	2·6877	2·6903	2·6930	2·6956	2·6982	2·7008	2·7034	·0026
164	2·7061	2·7087	2·7113	2·7139	2·7165	2·7191	2·7217	2·7243	2·7268	2·7294	·0026
165	2·7320	2·7346	2·7372	2·7398	2·7423	2·7449	2·7475	2·7500	2·7526	2·7552	·0026
166	23 2·7577	2·7603	2·7628	2·7654	2·7679	2·7705	2·7730	2·7756	2·7781	2·7806	·0025
167	2·7832	2·7857	2·7882	2·7908	2·7933	2·7958	2·7983	2·8008	2·8034	2·8059	·0025
168	2·8084	2·8109	2·8134	2·8159	2·8184	2·8209	2·8234	2·8258	2·8283	2·8308	·0025
169	23 2·8333	2·8358	2·8383	2·8407	2·8432	2·8457	2·8481	2·8506	2·8531	2·8555	·0025
170	2·8580	2·8604	2·8629	2·8653	2·8678	2·8702	2·8726	2·8751	2·8775	2·8799	·0024
171	2·8824	2·8848	2·8872	2·8896	2·8921	2·8945	2·8969	2·8993	2·9017	2·9041	·0024
172	23 2·9065	2·9089	2·9113	2·9137	2·9161	2·9185	2·9209	2·9233	2·9257	2·9281	·0024
173	2·9304	2·9328	2·9352	2·9376	2·9399	2·9423	2·9447	2·9470	2·9494	2·9518	·0024
174	2·9541	2·9565	2·9588	2·9612	2·9635	2·9659	2·9682	2·9705	2·9729	2·9752	·0023
175	23 2·9776	2·9799	2·9822	2·9845	2·9869	2·9892	2·9915	2·9938	2·9961	2·9985	·0023
176	3·0008	3·0031	3·0054	3·0077	3·0100	3.0123	3·0146	3·0169	3·0192	3·0215	·0023
177	3·0237	3·0260	3·0283	3·0306	3·0329	3·0351	3·0374	3·0397	3·0420	3·0442	·0023
178	23 3·0465	3·0488	3·0510	3·0533	3·0555	3·0573	3·0600	3·0623	3·0645	3·0668	·0023
179	3 0690	3·0713	3·0735	3·0757	3·0780	3·0802	3·0824	3 0847	3·0869	3·0891	·0022
180	3·0913	3·0935	3·0958	3·0980	3·1002	3·1024	3·1045	3·1068	3·1090	3·1112	·0022
181	23 5 1134	3·1156	3·1178	3·1200	3·1222	3·1244	3·1266	3·1287	3·1309	3·1331	·0022
182	3·1353	3·1375	3·1396	3·1418	3·1440	3·1461	3·1483	3·1505	3·1526	3·1548	·0022
183	3·1569	3·1591	3·1613	3·1634	3·1656	3·1677	3·1698	3·1720	3·1741	3·1763	·0021

Digitized by Google

TABLE III—*continued.*

$$t = C\,(T_r - T_v).$$

v.	0	1	2	3	4	5	6	7	8	9	Diff.
f/s.	secs.	secs.	secs.	secs.	secs.	secs.	secs.	secs.	secs.	secs.	+
184	23 3·1784	3·1805	3·1827	3·1848	3·1869	3·1891	3·1912	3·1933	3·1954	3·1975	·0021
185	3·1997	3·2018	3·2039	3·2060	3·2081	3·2102	3·2123	3·2144	3·2165	3·2186	·0021
186	3·2207	3·2228	3·2249	3·2270	3·2291	3·2312	3·2333	3·2353	3·2374	3·2395	·0021
187	23 3·2416	3·2437	3·2457	3·2478	3·2499	3·2520	3·2540	3·2561	3·2582	3·2602	·0021
188	3·2623	3·2643	3·2664	3·2685	3·2705	3·2726	3·2746	3·2767	3·2787	3·2808	·0021
189	3·2828	3·2848	3·2869	3·2889	3·2909	3·2930	3·2950	3·2970	3·2991	3·3011	·0020
190	23 3·3031	3·3051	3·3072	3·3092	3·3112	3·3132	3·3152	3·3172	3·3192	3·3212	·0020
191	3·3233	3·3253	3·3273	3·3293	3·3313	3·3333	3·3353	3·3372	3·3392	3·3412	·0020
192	3·3432	3·3452	3·3472	3·3492	3·3511	3·3531	3·3551	3·3571	3·3590	3·3610	·0020
193	23 3·3630	3·3649	3·3669	3·3689	3·3708	3·3728	3·3747	3·3767	3·3786	3·3806	·0020
194	3·3825	3·3845	3·3864	3·3884	3·3903	3·3922	3·3942	3·3961	3·3980	3·4000	·0019
195	3·4019	3·4038	3·4057	3·4077	3·4096	3·4115	3·4134	3·4153	3·4172	3·4192	·0019
196	23 3·4211	3·4230	3·4249	3·4268	3·4287	3·4306	3·4325	3·4344	3·4362	3·4381	·0019
197	3·4400	3·4419	3·4438	3·4457	3·4476	3·4494	3·4513	3·4532	3·4550	3·4569	·0019
198	3·4588	3·4606	3·4625	3·4644	3·4662	3·4681	3·4699	3·4718	3·4736	3·4755	·0019
199	23 3·4773	3·4791	3·4810	3·4828	3·4846	3·4865	3·4883	3·4901	3·4920	3·4938	·0018
200	3·4956	3·4974	3·4992	3·5010	3·5028	3·5047	3·5065	3·5083	3·5101	3·5119	·0018
201	3·5137	3·5155	3·5172	3·5190	3·5208	3·5226	3·5244	3·5262	3·5280	3·5297	·0018
202	23 3·5315	3·5333	3·5351	3·5368	3·5386	3·5404	3·5421	3·5439	3·5456	3·5474	·0018
203	3·5492	3·5509	3·5527	3·5544	3·5561	3·5579	3·5596	3·5614	3·5631	3·5648	·0017
204	3·5666	3·5683	3·5700	3·5717	3·5735	3·5752	3·5769	3·5786	3·5803	3·5820	·0017
205	23 3·5837	3·5854	3·5871	3·5888	3·5905	3·5922	3·5939	3·5956	3·5973	3·5990	·0017
206	3·6007	3·6024	3·6040	3·6057	3·6074	3·6091	3·6107	3·6124	3·6141	3·6157	·0017
207	3·6174	3·6191	3·6207	3·6224	3·6240	3·6257	3·6273	3·6290	3·6306	3·6323	·0016
208	23 3·6339	3·6355	3·6372	3·6388	3·6404	3·6420	3·6437	3·6453	3·6469	3·6485	·0016
209	3·6502	3·6518	3·6534	3·6550	3·6566	3·6582	3·6598	3·6614	3·6630	3·6646	·0016
210	3·6662	3·6678	3·6694	3·6710	3·6726	3·6741	3·6757	3·6773	3·6789	3·6805	·0016
211	23 3·6820	3·6836	3·6852	3·6867	3·6883	3·6899	3·6914	3·6930	3·6946	3·6961	·0016
212	3·6977	3·6992	3·7008	3·7023	3·7039	3·7054	3·7070	3·7085	3·7100	3·7116	·0015
213	3·7131	3·7146	3·7162	3·7177	3·7192	3·7207	3·7223	3·7238	3·7253	3·7268	·0015
214	23 3·7283	3·7298	3·7313	3·7329	3·7344	3·7359	3·7374	3·7389	3·7404	3·7419	·0015
215	3·7434	3·7448	3·7463	3·7478	3·7493	3·7508	3·7523	3·7538	3·7552	3·7567	·0015
216	3·7582	3·7597	3·7612	3·7626	3·7641	3·7656	3·7670	3·7685	3·7700	3·7714	·0015
217	23 3·7729	3·7743	3·7758	3·7772	3·7787	3·7801	3·7816	3·7830	3·7845	3·7859	·0014
218	3·7874	3·7888	3·7902	3·7917	3·7931	3·7945	3·7960	3·7974	3·7988	3·8002	·0014
219	3·8016	3·8031	3·8045	3·8059	3·8073	3·8087	3·8101	3·8115	3·8129	3·8144	·0014
220	23 3·8158	3·8172	3·8186	3·8200	3·8214	3·8227	3·8241	3·8255	3·8269	3·8283	0014
221	3·8297	3·8311	3·8325	3·8338	3·8352	3·8366	3·8380	3·8394	3·8407	3·8421	·0014
222	3·8435	3·8448	3·8462	3·8476	3·8489	3·8503	3·8517	3·8530	3·8544	3·8557	·0014
223	23 3·8571	3·8584	3·8598	3·8611	3·8625	3·8638	3·8651	3·8665	3·8678	3·8692	·0013
224	3·8705	3·8718	3·8732	3·8745	3·8758	3·8772	3·8785	3·8798	3·8811	3·8824	·0013
225	3·8838	3·8851	3·8864	3·8877	3·8890	3·8903	3·8916	3·8930	3·8943	3·8956	·0013
226	23 3·8969	3·8982	3·8995	3·9008	3·9021	3·9034	3·9047	3·9059	3·9072	3·9085	·0013
227	3·9098	3·9111	3·9124	3·9137	3·9150	3·9162	3·9175	3·9188	3·9201	3·9214	·0013
228	3·9226	3·9239	3·9252	3·9264	3·9277	3·9290	3·9303	3·9315	3·9328	3·9341	·0013
229	23 3·9353	3·9366	3·9378	3·9391	3·9404	3·9416	3·9429	3·9441	3·9454	3·9467	·0013
230	3·9479	3·9492	3·9504	3·9517	3·9529	3·9542	3·9554	3·9567	3·9579	3·9592	·0013
231	3·9604	3·9617	3·9629	3·9642	3·9654	3·9667	3·9679	3·9692	3·9704	3·9716	·0012
232	23 3·9729	3·9741	3·9754	3·9766	3·9779	3·9791	3·9803	3·9816	3·9828	3·9841	·0012
233	3·9853	3·9866	3·9878	3·9890	3·9903	3·9915	3·9927	3·9940	3·9952	3·9965	·0012
234	3·9977	3·9989	4·0002	4·0014	4·0026	4·0039	4·0051	4·0063	4·0076	4·0088	·0012
235	23 4·0100	4·0113	4·0125	4·0137	4·0150	4·0162	4·0174	4·0186	4·0199	4·0211	·0012
236	4·0223	4·0236	4·0248	4·0260	4·0272	4·0284	4·0297	4·0309	4·0321	4·0334	·0012
237	4·0346	4·0358	4·0370	4·0383	4·0395	4·0407	4·0419	4·0431	4·0444	4·0456	·0012
238	23 4·0468	4·0480	4·0492	4·0505	4·0517	4·0529	4·0541	4·0553	4·0566	4·0578	·0012
239	4·0590	4·0602	4·0614	4·0626	4·0639	4·0651	4·0663	4·0675	4·0687	4·0699	·0012
240	4·0711	4·0724	4·0736	4·0748	4·0760	4·0772	4·0784	4·0796	4·0809	4·0821	·0012
241	23 4·0833	4·0845	4·0857	4·0869	4·0881	4·0893	4·0905	4·0917	4·0930	4·0942	·0012
242	4·0954	4·0966	4·0978	4·0990	4·1002	4·1014	4·1026	4·1038	4·1050	4·1062	·0012
243	4·1074	4·1087	4·1099	4·1111	4·1123	4·1135	4·1147	4·1159	4·1171	4·1183	·0012

Digitized by Google

TABLE III—*continued.*

$$t = C\,(T_r - T_v).$$

v.	0	1	2	3	4	5	6	7	8	9	Diff.
f/s.	secs.	secs.	secs.	secs.	secs.	secs.	secs.	secs.	secs.	secs.	+
244	23 4·1195	4·1207	4·1219	4·1231	4·1243	4·1255	4·1267	4·1279	4·1291	4·0303	·0012
245	4·1315	4·1327	4·1339	4·1351	4·1363	4·1375	4·1387	4·1399	4·1411	4·1423	·0012
246	4·1435	4·1447	4·1459	4·1471	4·1483	4·1495	4·1506	4·1518	4·1530	4·1542	·0012
247	23 4·1554	4·1566	4·1578	4·1590	4·1602	4·1614	4·1626	4·1638	4·1649	4·1661	·0012
248	4·1673	4·1685	4·1697	4·1709	4·1721	4·1733	4·1744	4·1756	4·1768	4·1780	·0012
249	4·1792	4·1804	4·1815	4·1827	4·1839	4·1851	4·1863	4·1874	4·1886	4·1898	·0012
250	23 4·1910	4·1922	4·1933	4·1945	4·1957	4·1969	4·1980	4·1992	4·2004	4·2015	·0012
251	4·2027	4·2039	4·2051	4·2062	4·2074	4·2086	4·2097	4·2109	4·2121	4·2132	·0012
252	4·2141	4·2156	4·2167	4·2179	4·2190	4·2202	4·2214	4 2225	4·2237	4·2248	·0012
253	23 4·2260	4·2272	4·2283	4·2295	4·2306	4·2318	4·2329	4·2341	4·2352	4·2364	·0012
254	4·2375	4·2387	4·2398	4·2410	4·2421	4·2433	4·2444	4·2455	4·2467	4·2478	·0011
255	4·2490	4·2501	4·2513	4·2524	4·2535	4·2547	4·2558	4·2569	4·2581	4·2592	·0011
256	23 4·2603	4·2615	4·2626	4·2637	4·2648	4·2660	4·2671	4·2682	4·2693	4·2705	·0011
257	4·2716	4·2727	4·2738	4·2749	4·2760	4·2772	4·2783	4·2794	4·2805	4·2816	·0011
258	4·2827	4·2838	4·2849	4·2860	4·2871	4·2882	4·2893	4·2904	4·2915	4·2926	·0011
259	23 4·2937	4·2948	4·2959	4·2970	4·2981	4·2992	4·3003	4·3014	4·3025	4·3036	·0011
260	4·3046	4·3057	4·3068	4·3079	4·3090	4·3101	4·3111	4·3122	4·3133	4·3144	·0011
261	4·3154	4·3165	4·3176	4·3187	4·3197	4·3208	4·3219	4·3229	4·3240	4·3250	·0011
262	23 4·3261	4·3272	4·3282	4·3293	4·3303	4·3314	4·3325	4·3335	4·3346	4·3356	·0011
263	4·3367	4·3377	4·3388	4·3398	4·3409	4·3419	4·3429	4·3440	4·3450	4·3461	·0010
264	4·3471	4·3482	4·3492	4·3502	4·3513	4·3523	4·3533	4·3544	4·3554	4·3564	·0010
265	23 4·3574	4·3585	4·3595	4·3605	4·3615	4·3626	4·3636	4·3646	4·3656	4·3667	·0010
266	4·3677	4·3687	4·3697	4·3707	4·3717	4·3728	4·3738	4·3748	4·3758	4·3768	·0010
267	4·3778	4·3788	4·3798	4·3808	4·3818	4·3828	4·3838	4·3848	4·3858	4·3868	·0010
268	23 4·3878	4·3888	4·3898	4·3908	4·3918	4·3928	4·3938	4·3948	4·3958	4·3968	·0010
269	4·3977	4·3987	4·3997	4·4007	4·4017	4·4027	4·4036	4·4046	4·4056	4·4066	0010
270	4·4075	4·4085	4·4095	4·4105	4·4114	4·4124	4·4134	4·4143	4·4153	4·4163	·0010
271	23 4·4172	4·4182	4·4192	4·4201	4·4211	4·4220	4·4230	4·4240	4·4249	4·4259	·0010
272	4·4268	4·4278	4·4287	4·4297	4·4307	4·4316	4·4326	4·4335	4·4344	4·4354	·0010
273	4·4363	4·4373	4·4382	4·4392	4·4401	4·4411	4·4420	4·4429	4·4439	4·4448	·0009
274	23 4·4457	4·4467	4·4476	4·4485	4·4495	4·4504	4·4513	4·4523	4·4532	4·4541	·0009
275	4·4551	4·4560	4·4569	4·4578	4·4587	4·4597	4·4606	4·4615	4·4624	4·4633	·0009
276	4·4643	4·4652	4·4661	4·4670	4·4679	4·4688	4·4697	4·4706	4·4715	4·4725	·0009
277	23 4·4734	4·4743	4·4752	4·4761	4·4770	4·4779	4·4788	4·4797	4·4806	4·4815	·0009
278	4·4824	4·4833	4·4842	4·4850	4·4859	4·4868	4·4877	4·4886	4·4895	4·4904	·0009
279	4·4913	4·4922	4 4930	4·4939	4·4948	4·4957	4·4966	4·4975	4·4983	4·4992	·0009
280	23 4·5001	4·5010	4·5018	4·5027	4·5036	4·5045	4·5053	4·5062	4·5071	4·5080	·0009
281	4·5088	4·5097	4·5105	4·5114	4·5123	4·5131	4·5140	4·5148	4·5157	4·5166	·0009
282	4·5174	4·5183	4·5191	4·5200	4·5208	4·5217	4·5226	4·5234	4·5243	4·5251	·0009
283	23 4·5260	4·5268	4·5277	4·5285	4·5293	4·5302	4·5310	4·5319	4·5327	4·5336	·0008
284	4·5344	4·5352	4·5361	4·5369	4·5378	4·5386	4·5394	4·5403	4·5411	4·5419	·0008
285	4·5427	4 5436	4·5444	4·5452	4·5461	4·5469	4·5477	4·5485	4·5494	4·5502	·0008
286	23 4·5510	4·5518	4·5527	4·5535	4·5543	4·5551	4·5559	4·5567	4·5576	4·5584	·0008
287	4·5592	4·5600	4·5608	4·5616	4·5624	4·5632	4·5641	4·5648	4·5657	4·5665	·0008
288	4·5673	4·5681	4·5689	4·5697	4·5705	4·5713	4·5721	4·5729	4·5737	4·5745	·0008
289	23 4·5753	4·5761	4·5769	4·5777	4·5785	4·5793	4·5800	4·5808	4·5816	4·5824	·0008
290	4·5832										

Digitized by Google

TABLE IV.

Distance s in feet, between velocities V and v f/s;

$$s = C\,(S_V - S_v),$$

(From Supplement *Bashforth's Motion of Projectiles*, 1881.)

v.	0	1	2	3	4	5	6	7	8	9	Diff.
f/s.	feet.	feet.	feet.	feet.	feet.	feet.	feet.	feet.	feet.	feet.	+
10	1066	1238	1409	1578	1745	1910	2074	2236	2397	2557	166
11	2715	2871	3026	3180	3333	3484	3633	3782	3929	4075	151
12	4220	4363	4506	4647	4787	4926	5064	5200	5336	5471	139
13	5604	5737	5866	5999	6129	6257	6385	6511	6637	6762	129
14	6886	7009	7132	7253	7373	7493	7612	7730	7847	7964	120
15	8079	8194	8309	8422	8535	8647	8758	8868	8978	9087	112
16	9196	9304	9411	9517	9623	9728	9833	9937	10040	10142	105
17	10244	10346	10447	10546	10645	10743	10841	10939	11037	11134	98
18	11230	11326	11421	11516	11610	11704	11797	11890	11982	12074	94
19	12165	12256	12346	12436	12525	12614	12703	12791	12878	12966	89
20	13052	13139	13224	13310	13395	13480	13564	13648	13731	13814	85
21	13896	13979	14060	14142	14223	14303	14384	14463	14543	14622	81
22	14701	14779	14857	14935	15013	15090	15167	15244	15319	15395	77
23	15470	15545	15620	15694	15768	15842	15916	15989	16061	16134	74
24	16206	16278	16350	16421	16492	16563	16633	16703	16773	16843	71
25	1 6912·1	6981·2	7050·0	7118·5	7186·7	7254·7	7322·4	7389·8	7457·0	7523·9	68·0
26	7590·6	7657·0	7723·2	7789·1	7854·7	7920·1	7985·3	8050·2	8114·8	8179·3	65·4
27	8243·5	8307·5	8371·2	8434·7	8498·0	8561·0	8623·9	8686·4	8748·8	8810·9	63·0
28	1 8872·8	8934·5	8996·0	9057·2	9118·3	9179·1	9239·7	9300·1	9360·3	9420·3	60·8
29	9480·0	9539·6	9598·9	9658·1	9717·0	9775·8	9834·3	9892·6	9950·8	*0008·7	58·7
30	2 0066·5	0124·0	0181·4	0238·5	0295·5	0352·3	0409·0	0465·4	0521·7	0577·7	56·8
31	2 0633·6	0689·3	0744·8	0800·1	0855·3	0910·2	0965·0	1019·6	1074·0	1128·3	55·0
32	1182·4	1236·3	1290·0	1343·5	1396·9	1450·2	1503·2	1556·1	1608·8	1661·4	53·2
33	1713·8	1766·0	1818·1	1870·0	1921·7	1973·3	2024·7	2076·0	2127·1	2178·1	51·6
34	2 2228·9	2279·6	2330·0	2380·4	2430·6	2480·6	2530·5	2580·2	2629·7	2679·1	50·0
35	2728·4	2777·5	2826·4	2875·2	2923·8	2972·3	3020·7	3068·8	3116·9	3164·7	48·5
36	3212·5	3260·1	3307·5	3354·8	3402·0	3449·0	3495·9	3542·6	3589·2	3635·6	47·0
37	2 3682·0	3728·1	3774·2	3820·0	3865·8	3911·4	3956·9	4002·2	4047·4	4092·5	45·6
38	4137·4	4182·2	4226·8	4271·4	4315·7	4360·0	4404·1	4448·1	4491·9	4535·7	44·3
39	4579·2	4622·7	4666·0	4709·2	4752·3	4795·2	4838·1	4880·8	4923·3	4965·7	42·9
40	2 5008·0	5050·2	5092·3	5134·2	5176·0	5217·6	5259·2	5300·6	5341·9	5383·0	41·7
41	5424·0	5464·9	5505·7	5546·4	5586·9	5627·3	5667·6	5707·8	5747·8	5787·8	40·4
42	5827·6	5867·3	5906·9	5946·4	5985·8	6025·0	6064·2	6103·3	6142·2	6181·0	39·3
43	2 6219·8	6258·4	6296·9	6335·3	6373·6	6411·8	6449·9	6487·9	6525·8	6536·6	38·2
44	6601·3	6638·9	6676·4	6713·7	6751·0	6788·2	6825·3	6862·3	6899·3	6936·1	37·2
45	6972·8	7009·4	7046·0	7082·4	7118·8	7155·0	7191·2	7227·3	7263·3	7299·2	36·3
46	2 7335·1	7370·8	7406·5	7442·1	7477·6	7513·0	7548·3	7583·6	7618·8	7653·9	35·4
47	7688·9	7723·8	7758·7	7793·5	7828·2	7862·8	7897·3	7931·8	7966·2	8000·5	34·6
48	8034·7	8068·9	8103·0	8137·0	8170·9	8204·8	8238·6	8272·3	8305·9	8339·5	33·9
49	2 8373·0	8406·5	8439·8	8473·1	8506·4	8539·5	8572·6	8605·6	8638·6	8671·5	33·2
50	8704·3	8737·1	8769·8	8802·4	8835·0	8867·5	8900·0	8932·3	8964·7	8996·9	32·5
51	9029·1	9061·2	9093·2	9125·2	9157·1	9189·0	9220·8	9252·5	9284·2	9315·8	31·9
52	2 9347·3	9378·8	9410·3	9441·6	9472·9	9504·2	9535·4	9566·5	9597·6	9628·7	31·3
53	9659·6	9690·6	9721·4	9752·2	9783·0	9813·7	9844·3	9874·9	9905·4	9935·9	30·7
54	9966·3	9996·7	*0027·0	0057·3*	*0087·5	*0117·7	0147·8*	*0177·8	*0207·8	0237·8*	30·2
55	3 0267·6	0297·5	0327·3	0357·0	0386·7	0416·3	0445·9	0475·4	0504·9	0534·3	29·6
56	0563·6	0592·9	0622·2	0651·4	0680·6	0709·7	0738·7	0767·7	0796·7	0825·6	29·1
57	0854·5	0883·3	0912·1	0940·9	0969·6	0998·2	1026·8	1055·4	1083·9	1112·4	28·6
58	3 1140·8	1169·2	1197·6	1226·0	1254·3	1282·5	1310·8	1339·0	1367·1	1395·2	28·3
59	1423·3	1451·3	1479·3	1507·3	1535·2	1563·0	1590·9	1618·7	1646·4	1674·2	27·9
60	1701·8	1729·5	1757·1	1784·6	1812·2	1839·6	1867·1	1894·5	1921·9	1949·2	27·5
61	3 1976·5	2003·7	2031·0	2058·1	2085·3	2112·4	2139·4	2166·4	2193·4	2220·4	27·1
62	2247·3	2274·2	2301·0	2327·8	2354·5	2381·3	2407·9	2434·6	2461·2	2487·7	26·7
63	2514·3	2540·8	2567·2	2593·6	2620·0	2646·3	2672·6	2698·9	2725·1	2751·3	26·3

Digitized by Google

TABLE IV—*continued.*

$s = C (S_r - S_v)$.

v.	0	1	2	3	4	5	6	7	8	9	Diff.
f/s.	feet.	feet.	feet.	feet.	feet.	feet.	feet.	feet.	feet.	feet.	+
64	3 2777·5	2803·6	2829·7	2855·7	2881·7	2907·7	2933·7	2959·6	2985·4	3011·2	26·0
65	3037·0	3062·8	3088·5	3114·2	3139·8	3165·4	3191·0	3216·5	3242·0	3267·4	25·6
66	3292·8	3318·2	3343·5	3368·8	3394·1	3419·3	3444·5	3469·6	3494·7	3519·8	25·2
67	3 3544·8	3569·8	3594·8	3619·8	3644·7	3669·5	3694·3	3719·1	3743·9	3768·6	24·8
68	3793·3	3818·0	3842·6	3867·2	3891·7	3916·2	3940·7	3965·2	3989·6	4014·0	24·5
69	4038·4	4062·7	4087·0	4111·3	4135·6	4159·8	4184·0	4208·1	4232·2	4256·3	24·2
70	3 4280·4	4304·5	4328·5	4352·4	4376·4	4400·3	4424·1	4448·0	4471·8	4495·5	23·9
71	4519·3	4543·0	4566·6	4590·2	4613·8	4637·4	4660·9	4684·4	4707·8	4731·3	23·5
72	4754·7	4777·9	4801·3	4824·6	4847·9	4871·1	4894·2	4917·4	4940·5	4963·6	23·2
73	3 4986·6	5009·6	5032·6	5055·5	5078·4	5101·3	5124·1	5146·9	5169·6	5192·4	22·8
74	5215·1	5237·7	5260·3	5282·9	5305·5	5328·0	5350·5	5373·0	5395·4	5417·8	22·5
75	5440·2	5462·5	5484·8	5507·1	5529·3	5551·5	5573·7	5595·8	5617·9	5640·0	22·2
76	3 5662·1	5684·1	5706·0	5728·0	5749·9	5771·7	5793·5	5815·3	5837·0	5858·7	21·8
77	5880·4	5902·0	5923·6	5945·1	5966·6	5988·1	6009·5	6030·9	6052·2	6073·6	21·5
78	6094·8	6116·1	6137·3	6158·4	6179·6	6200·7	6221·7	6242·7	6263·7	6284·6	21·1
79	3 6305·5	6326·4	6347·2	6368·0	6388·8	6409·5	6430·2	6450·8	6471·4	6492·0	20·7
80	6512·6	6533·1	6553·6	6574·0	6594·4	6614·8	6635·1	6655·4	6675·7	6695·9	20·4
81	6716·1	6736·3	6756·4	6776·5	6796·5	6816·3	6836·5	6856·4	6876·3	6896·1	20·0
82	3 6916·0	6935·7	6955·5	6975·1	6994·8	7014·4	7033·9	7053·4	7072·9	7092·3	19·6
83	7111·7	7131·0	7150·3	7169·6	7188·8	7207·9	7227·1	7246·1	7265·2	7284·1	19·1
84	7303·1	7322·0	7340·8	7359·6	7378·4	7397·1	7415·8	7434·4	7453·0	7471·5	18·7
85	3 7490·0	7508·5	7526·9	7545·3	7563·6	7581·8	7600·0	7618·2	7636·3	7654·4	18·2
86	7692·4	7690·5	7708·4	7726·4	7744·2	7762·0	7799·9	7797·6	7815·4	7833·0	17·8
87	7850·6	7868·2	7885·8	7903·3	7920·8	7938·2	7955·6	7973·0	7990·3	8007·6	17·4
88	3 8024·8	8042·0	8059·2	8076·3	8093·4	8110·4	8127·4	8144·4	8161·3	8178·2	17·0
89	8195·0	8211·9	8228·6	8245·4	8262·1	8278·7	8295·4	8312·0	8328·5	8345·0	16·6
90	8361·5	8377·9	8394·3	8410·7	8427·0	8443·3	8459·6	8475·8	8492 0	8508·2	16·3
91	3 8524·3	8540·4	8556·4	8572·4	8588·4	8604·3	8620·3	8636·1	8652·0	8667·8	15·9
92	8683·5	8699·3	8715·0	8730·7	8746·3	8761·9	8777·5	8793·0	8808·5	8824·0	15·6
93	8839·4	8854·8	8870·2	8885·5	8900·8	8916·1	8931·3	8946·5	8961·7	8976·8	15·3
94	3 8991·9	9007·0	9022·0	9037·0	9052·0	9066·9	9081·9	9096·7	9111·6	9126·4	15·0
95	9141·2	9156·0	9170·7	9185·4	9200·1	9214·7	9229·3	9243·9	9258·4	9272·9	14·6
96	9287·4	9301·9	9316·3	9330·7	9345·0	9359·4	9373·7	9387·9	9402·2	9416·4	14·3
97	3 9430·6	9444·7	9458·9	9473·0	9487·0	9501·1	9515·1	9529·1	9543·0	9557·0	14·0
98	9570·8	9584·7	9598·6	9612·4	9626·1	9639·9	9653·6	9667·3	9681·0	9694·6	13·7
99	9708·3	9721·9	9735·4	9749·0	9762·5	9775·9	9789·4	9802·8	9816·2	9829·6	13·5
100	3 9842·9	9856·3	9869·6	9882·9	9896·1	9909·3	9922·5	9935·3	9948·8	9961·9	13·2
101	9975·0	9988·1	*0001·1	0014·1*	*0027·1	*0040·0	0052·9*	*0065·8	*0078·7	0091·5*	12·9
102	4 0104·3	0117·1	0129·8	0142·5	0155·2	0167·8	0180·4	0192·9	0205·4	0217·8	12·6
103	4 0230·1	0242·4	0254·6	0266·8	0278·8	0290·8	0302·7	0314·5	0326·2	0337·8	11·9
104	0349·4	0360·8	0372·2	0383·4	0394·5	0405·6	0416·5	0427·3	0438·1	0448·7	11·0
105	0459·2	0469·6	0479·9	0490·0	0500·1	0510·1	0520·0	0529·8	0539·5	0549·2	9·9
106	4 0558·7	0568·2	0577·6	0586·9	0596·2	0605·4	0614·5	0623·6	0632·6	0641·6	9·2
107	0650·5	0659·3	0668·1	0676·9	0685·6	0694·2	0702·8	0711·4	0719·9	0728·4	8·6
108	0736·8	0745·2	0753·6	0761·9	0770·2	0778·4	0786·6	0794·8	0802·9	0811·0	8·2
109	4 0819·0	0827·1	0835·0	0843·0	0850·9	0858·9	0866·7	0874·6	0882·4	0890·2	7·9
110	0897·9	0905·7	0913·4	0921·1	0928·7	0936·4	0944·0	0951·5	0959·1	0966·6	7·6
111	0974·2	0981·6	0989·1	0996·6	1004·0	1011·4	1018·8	1026·2	1033·5	1040·9	7·4
112	4 1048·2	1055·5	1062·8	1070·0	1077·3	1084·5	1091·7	1099·0	1106·1	1113·3	7·2
113	1120·5	1127·6	1134·8	1141·9	1149·0	1156·1	1163·2	1170·2	1177·3	1184·4	7·1
114	1191·4	1198·4	1205·4	1212·4	1219·4	1226·4	1233·3	1240·3	1247·2	1254·1	6·9
115	4 1261·0	1267·9	1274·8	1281·7	1288·6	1295·4	1302·3	1309·1	1315·9	1322·7	6·8
116	1329·5	1336·3	1343·1	1349·8	1356·6	1363·3	1370·0	1376·7	1383·4	1390·1	6·7
117	1396·8	1403·5	1410·1	1416·8	1423·4	1430·0	1436·6	1443·2	1449·8	1456·4	6·6
118	4 1462·9	1469·5	1476·0	1482·6	1489·1	1495·6	1502·1	1508·6	1515·1	1521·5	6·5
119	1528·0	1534·4	1540·9	1547·3	1553·7	1560·1	1566·5	1572·9	1579·2	1585·6	6·4
120	1591·9	1598·3	1604·6	1610·9	1617·2	1623·5	1629·8	1636·1	1642·3	1648·6	6·3
121	4 1654·8	1661·1	1667·3	1673·5	1679·7	1685·9	1692·1	1698·2	1704·4	1710·5	6·2
122	1716·7	1722·8	1728·9	1735·0	1741·1	1747·2	1753·3	1759·4	1765·4	1771·5	6·1
123	1777·5	1783·6	1789·6	1795·6	1801·6	1807·6	1813·6	1819·6	1825 6	1831·5	6·0

Digitized by Google

TABLE IV—*continued.*

$s = C (S_r - S_v)$.

v.	0	1	2	3	4	5	6	7	8	9	Diff.
f/s.	feet.	feet.	feet.	feet.	feet.	feet.	feet.	feet.	feet.	feet.	+
124	4 1837·5	1843·4	1849·4	1855·3	1861·2	1867·1	1873·0	1878·9	1884·8	1890·6	5·9
125	1896·5	1902·3	1908·2	1914·0	1919·8	1925·6	1931·5	1937·3	1943·0	1948·8	5·8
126	1954·6	1960·4	1966·1	1971·9	1977·6	1983·3	1989·0	1994·8	2000·5	2006·2	5·7
127	4 2011·8	2017·5	2023·2	2028·9	2034·5	2040·2	2045·8	2051·4	2057·0	2062·7	5·6
128	2068·3	2073·9	2079·5	2085·0	2090·6	2096·2	2101·8	2107·3	2112·9	2118·4	5·6
129	2123·9	2129·4	2135·0	2140·5	2146·0	2151·5	2157·0	2162·4	2167·9	2173·4	5·5
130	4 2178·8	2184·3	2189·7	2195·1	2200·6	2206·0	2211·4	2216·8	2222·2	2227·6	5·4
131	2233·0	2238·4	2243·7	2249·1	2254·5	2259·8	2265·1	2270·5	2275·8	2281·1	5·3
132	2286·4	2291·8	2297·1	2302·4	2307·7	2312·9	2318·2	2323·5	2328·7	2334·0	5·3
133	4 2339·2	2344·5	2349·7	2355·0	2360·2	2365·4	2370·6	2375·8	2381·0	2386·2	5·2
134	2391·4	2396·6	2401·8	2406·9	2412·1	2417·3	2422·4	2427·6	2432·7	2437·8	5·2
135	2443·0	2448·1	2453·2	2458·3	2463·4	2468·5	2473·6	2478·7	2483·8	2488·9	5·1
136	4 2493·9	2499·0	2504·1	2509·1	2514·2	2519·2	2524·3	2529·3	2534·3	2539·4	5·0
137	2544·4	2549·4	2554·4	2559·4	2564·4	2569·4	2574·4	2579·4	2584·3	2589·3	5·0
138	2594·3	2599·2	2604·2	2609·1	2614·1	2619·0	2624·0	2628·9	2633·8	2638·8	4·9
139	4 2643·7	2648·6	2653·5	2658·4	2663·3	2668·2	2673·1	2678·0	2682·9	2687·8	4·9
140	2692·6	2697·5	2702·4	2707·2	2712·1	2717·0	2721·8	2726·7	2731·5	2736·3	4·9
141	2741·2	2746·0	2750·8	2755·7	2760·5	2765·3	2770·1	2774·9	2779·7	2784·5	4·8
142	4 2789·3	2794·1	2798·9	2803·7	2808·5	2813·2	2818·0	2822·8	2827·5	2832·3	4·8
143	2837·1	2841·8	2846·6	2851·3	2856·0	2860·8	2865·5	2870·2	2875·0	2879·7	4·7
144	2884·4	2889·1	2893·8	2898·6	2903·3	2908·0	2912·7	2917·4	2922·1	2926·7	4·7
145	4 2931·4	2936·1	2940·8	2945·5	2950·1	2954·8	2959·5	2964·1	2968·8	2973·5	4·7
146	2978·1	2982·8	2987·4	2992·1	2996·7	3001·3	3006·0	3010·6	3015·2	3019·9	4·6
147	3024·5	3029·1	3033·7	3038·4	3043·0	3047·6	3052·2	3056·8	3061·4	3066·0	4·6
148	4 3070·6	3075·2	3079·8	3084·4	3089·0	3093·5	3098·1	3102·7	3107·3	3111·8	4·6
149	3116·4	3121·0	3125·6	3130·1	3134·7	3139·2	3143·8	3148·3	3152·9	3157·4	4·6
150	3162·0	3166·5	3171·0	3175·6	3180·1	3184·6	3189·2	3193·7	3198·2	3202·7	4·5
151	4 3207·2	3211·8	3216·3	3220·8	3225·3	3229·8	3234·3	3238·8	3243·3	3247·8	4·5
152	3252·3	3256·8	3261·3	3265·8	3270·3	3274·8	3279·3	3283·8	3288·3	3292·8	4·5
153	3297·2	3301·7	3306·2	3310·6	3315·1	3319·6	3324·1	3328·5	3333·0	3337·5	4·5
154	4 3342·0	3346·4	3350·9	3355·3	3359·8	3364·3	3368·7	3373·2	3377·6	3382·1	4·5
155	3386·5	3391·0	3395·4	3399·9	3404·3	3408·7	3413·2	3417·6	3422·0	3426·5	4·4
156	3430·9	3435·3	3439·8	3444·2	3448·6	3453·0	3457·4	3461·9	3466·3	3470·7	4·4
157	4 3475·1	3479·5	3483·9	3488·3	3492·7	3497·1	3501·5	3505·9	3510·3	3514·7	4·4
158	3519·1	3523·5	3527·9	3532·3	3536·7	3541·1	3545·4	3549·8	3554·2	3558·6	4·4
159	3563·0	3567·3	3571·7	3576·1	3580·4	3584·8	3589·1	3593·5	3597·9	3602·2	4·4
160	4 3606·6	3610·9	3615·3	3619·6	3624·0	3628·3	3632·6	3637·0	3641·3	3645·7	4·3
161	3650·0	3654·3	3658·7	3663·0	3667·3	3671·6	3676·0	3680·3	3684·6	3688·9	4·3
162	3693·3	3697·6	3701·9	3706·2	3710·5	3714·8	3719·1	3723·4	3727·7	3732·0	4·3
163	4 3736·3	3740·6	3744·9	3749·2	3753·5	3757·8	3762·1	3766·4	3770·6	3774·9	4·3
164	3779·2	3783·5	3787·8	3792·0	3796·3	3800·6	3804·9	3809·1	3813·4	3817·6	4·3
165	3821·9	3826·2	3830·4	3834·7	3838·9	3843·2	3847·4	3851·7	3855·9	3860·2	4·3
166	4 3864·4	3868·7	3872·9	3877·2	3881·4	3885·6	3889·9	3894·1	3898·3	3902·5	4·2
167	3906·8	3911·0	3915·2	3919·5	3923·7	3927·9	3932·1	3936·3	3940·5	3944·7	4·2
168	3949·0	3953·2	3957·4	3961·6	3965·8	3970·0	3974·2	3978·4	3982·6	3986·7	4·2
169	4 3990·9	3995·1	3999·3	4003·5	4007·7	4011·9	4016·0	4020·2	4024·4	4028·6	4·2
170	4032·7	4036·9	4041·1	4045·2	4049·4	4053·6	4057·7	4061·9	4066·0	4070·2	4·2
171	4074·3	4078·5	4082·6	4086·8	4090·9	4095·1	4099·2	4103·3	4107·5	4111·6	4·1
172	4 4115·7	4119·9	4124·0	4128·1	4132·3	4136·4	4140·5	4144·6	4148·7	4152·2	4·1
173	4157·0	4161·1	4165·2	4169·3	4173·4	4177·5	4181·6	4185·7	4189·8	4193·9	4·1
174	4198·0	4202·1	4206·2	4210·3	4214·4	4218·5	4222·6	4226·7	4230·8	4234·8	4·1
175	4 4238·9	4243·0	4247·1	4251·2	4255·3	4259·3	4263·4	4267·5	4271·5	4275·6	4·1
176	4279·6	4283·7	4287·8	4291·8	4295·9	4300·0	4304·0	4308·0	4312·1	4316·1	4·1
177	4320·2	4324·2	4328·3	4332·3	4336·4	4340·4	4344·4	4348·5	4352·5	4356·5	4·0
178	4 4360·5	4364·6	4368·6	4372·6	4376·6	4380·7	4384·7	4388·7	4392·7	4396·7	4·0
179	4400·7	4404·7	4408·8	4412·8	4416·8	4420·8	4424·8	4428·8	4432·8	4436·8	4·0
180	4440·8	4444 7	4448·7	4452·7	4456·7	4460 7	4464·7	4468·7	4472·6	4476·6	4·0
181	4 4480·6	4484·6	4488·5	4492·5	4496·5	4500·5	4504·4	4508·4	4512·4	4516·3	4·0
182	4520·3	4524·2	4528·2	4532·2	4536·1	4540·1	4544·0	4548·0	4551·9	4555·9	4·0
183	4559·8	4563·7	4567·7	4571·6	4575·6	4579·5	4583·4	4587·4	4591·3	4595·2	3·9

Digitized by Google

TABLE IV—*continued.*

$$s = C\,(S_r - S_v).$$

v.	0	1	2	3	4	5	6	7	8	9	Diff.
f/s.	feet.	feet.	feet.	feet.	feet.	feet.	feet.	feet.	feet.	feet.	+
184	4 4599·2	4603·1	4607·0	4610·9	4614·9	4618·8	4622·7	4626·6	4630·5	4634·4	3·9
185	4638·4	4642·3	4646·2	4650·1	4654·0	4657·9	4661·8	4665·7	4669·6	4673·5	3·9
186	4677·4	4681·3	4685·2	4689·1	4693·0	4696·9	4700·8	4704·6	4708·5	4712·4	3·9
187	4 4716·3	4720·2	4724·1	4727·9	4731·8	4735·7	4739·6	4743·4	4747·3	4751·2	3·9
188	4755·0	4758·9	4762·8	4766·7	4770·5	4774·4	4778·2	4782·1	4786·0	4789·8	3·9
189	4793·7	4797·5	4801·4	4805·2	4809·1	4812·9	4816·8	4820·6	4824·5	4828·3	3·8
190	4 4832·2	4836·0	4839·8	4843·7	4847·5	4851·4	4855·2	4859·0	4862·8	4866·7	3·8
191	4870·5	4874·3	4878·1	4882·0	4885·8	4889·6	4893·4	4897·3	4901·1	4904·9	3·8
192	4908·7	4912·5	4916·3	4920·1	4923·9	4927·7	4931·5	4935·3	4939·1	4942·9	3·8
193	4 4946·7	4950·5	4954·3	4958·1	4961·9	4965·7	4969·4	4973·2	4977·0	4980·7	3·8
194	4984·5	4988·3	4992·1	4995·8	4999·6	5003·4	5007·1	5010·9	5014·7	5018·4	3·8
195	5022·2	5025·9	5029·7	5033·4	5037·2	5040·9	5044·7	5048·4	5052·1	5055·9	3·7
196	4 5059·6	5063·4	5067·1	5070·8	5074·6	5078·3	5082·0	5085·7	5089·4	5093·1	3·7
197	5096·9	5100·6	5104·3	5108·0	5111·7	5115·4	5119·1	5122·8	5126·5	5130·2	3·7
198	5133·9	5137·5	5141·2	5144·9	5148·6	5152·3	5156·0	5159·6	5163·3	5166·9	3·7
199	4 5170·6	5174·3	5177·9	5181·6	5185·2	5188·9	5192·5	5196·2	5199·8	5203·4	3·6
200	5207·1	5210·7	5214·3	5218·0	5221·6	5225·2	5228·8	5232·5	5236·1	5239·7	3·6
201	5243·3	5246·9	5250·5	5254·1	5257·7	5261·3	5264·9	5268·5	5272·1	5275·7	3·6
202	4 5279·2	5282·8	5286·4	5290·0	5293·6	5297·2	5300·7	5304·3	5307·8	5311·4	3·6
203	5314·9	5318·5	5322·0	5325·6	5329·1	5332·7	5336·2	5339·7	5343·3	5346·8	3·5
204	5350·3	5353·8	5357·3	5360·9	5364·4	5367·9	5371·4	5374·9	5378·4	5381·9	3·5
205	4 5385·4	5388·9	5392·4	5395·9	5399·4	5402·9	5406·3	5409·8	5413·3	5416·7	3·5
206	5420·2	5423·7	5427·1	5430·6	5434·1	5437·5	5441·0	5444·4	5447·8	5451·3	3·5
207	5454·7	5458·1	5461·6	5465·0	5468·4	5471·9	5475·3	5478·7	5482·1	5485·5	3·4
208	4 5488·9	5492·3	5495·7	5499·1	5502·5	5505·9	5509·3	5512·7	5516·1	5519·4	3·4
209	5522·8	5526·2	5529·6	5532·9	5536·3	5539·7	5543·0	5546·4	5549·7	5553·1	3·4
210	5556·4	5559·8	5563·1	5566·4	5569·8	5573·1	5576·5	5579·8	5583·1	5586·4	3·3
211	4 5589·7	5593·0	5596·4	5599·7	5603·0	5606·3	5609·6	5612·9	5616·2	5619·5	3·3
212	5622·8	56..6·1	5629·3	5632·6	5635·9	5639·2	5642·5	5645·7	5649·0	5652·3	3·3
213	5655·5	5658·8	5662·0	5665·3	5668·6	5671·8	5675·1	5678·3	5681·5	5684·8	3·2
214	4 5688·0	5691·2	5694·5	5697·7	5700·9	5704·2	5707·4	5710·6	5713·8	5717·0	3·2
215	5720·2	5723·4	5726·6	5729·9	5733·1	5736·3	5739·5	5742·6	5745·8	5749·0	3·2
216	5752·2	5755·4	5758·6	5761·8	5764·9	5768·1	5771·3	5774·4	5777·6	5780·8	3·2
217	4 5783·9	5787·1	5790·2	5793·4	5796·6	5799·7	5802·9	5806·0	5809·1	5812·2	3·1
218	5815·4	5818·5	5821·6	5824·8	5827·9	5831·0	5834·1	5837·3	5840·4	5843·5	3·1
219	5846·6	5849·7	5852·8	5855·9	5859·0	5862·1	5865·2	5868·3	5871·4	5874·4	3·1
220	4 5877·5	5880·6	5883·7	5886·8	5889·9	5893·0	5896·0	5899·1	5902·1	5905·2	3·1
221	5908·3	5911·3	5914·4	5917·4	5920·5	5923·6	5926·6	5929·6	5932·7	5935·7	3·0
222	5938·7	5941·8	5944·8	5947·8	5950·9	5953·9	5956·9	5959·9	5963·0	5966·0	3·0
223	4 5969·0	5972·0	5975·0	5978·0	5981·0	5984·0	5987·0	5990·0	5993·0	5996·0	3·0
224	5999·0	6002·0	6004·9	6007·9	6010·9	6013·9	6016·9	6019·8	6022·8	6025·8	3·0
225	6028·7	6031·7	6034·6	6037·6	6040·5	6043·5	6046·5	6049·4	6052·4	6055·3	3·0
226	4 6058·3	6061·2	6064·1	6067·1	6070·0	6072·9	6075·9	6078·8	6081·7	6084·7	2·9
227	6087·6	6090·5	6093·4	6096·3	6099·3	6102·2	6105·1	6108·0	6110·9	6113·8	2·9
228	6116·7	6119·6	6122·5	6125·4	6128·3	6131·2	6134·1	6137·0	6139·9	6142·8	2·9
229	4 6145·7	6148·6	6151·5	6154·4	6157·3	6160·2	6163·1	6166·0	6168·8	6171·7	2·
230	6174·6	6177·5	6180·4	6183·3	6186·2	6189·1	6191·9	6194·8	6197·7	6200·6	2·9
231	6203·5	6206·4	6209·3	6212·1	6215·0	6217·9	6220·8	6223·7	6226·6	6229·5	2·9
232	4 6232·3	6235·2	6238·1	6241·0	6243·9	6246·8	6249·7	6252·6	6255·4	6258·3	2·9
233	6261·2	6264·1	6267·0	6269·9	6272·8	6275·7	6278·6	6281·5	6284·3	6287·2	2·9
234	6290·1	6293·0	6295·9	6298·8	6301·7	6304·6	6307·5	6310·4	6313·3	6316·2	2·9
235	4 6319·0	6322·0	6324·9	6327·7	6330·6	6333·5	6336·4	6339·3	6342·2	6345·1	2·9
236	6348·0	6350·9	6353·8	6356·7	6359·6	6362·5	6365·4	6368·3	6371·2	6374·1	2·9
237	6377·0	6379·9	6382·8	6385·7	6388·6	6391·5	6394·4	6397·3	6400·2	6403·1	2·9
238	4 6406·0	6408·9	6411·8	6414·8	6417·7	6420·6	6423·5	6426·4	6429·3	6432·2	2·9
239	6435·1	6438·0	6440·9	6443·8	6446·8	6449·7	6452·6	6455·5	6458·4	6461·3	2·9
240	6464·2	6467·1	6470·1	6473·0	6475·9	6478·8	6481·7	6484·6	6487·6	6490·5	2·9
241	4 6493·4	6496·3	6499·2	6502·2	6505·1	6508·0	6510·9	6513·8	6516·8	6519·7	2·9
242	6522·6	6525·6	6528·5	6531·4	6534·3	6537·3	6540·2	6543·1	6546·1	6549·0	2·9
243	6551·9	6554·9	6557·8	6560·7	6563·7	6566·6	6569·5	6572·5	6575·4	6578·3	2·9

Digitized by Google

TABLE IV—*continued.*

$$s = C\,(S_v - S_v).$$

v.	0	1	2	3	4	5	6	7	8	9	Diff.
f/s.	feet.	feet.	feet.	feet.	feet.	feet.	feet.	feet.	feet.	feet.	+
244	4 6581·3	6584·2	6587·2	6590·1	6593·0	6596·0	6598·9	6601·8	6604·8	6607·7	2·9
245	6610·6	6613·6	6616·5	6619·5	6622·4	6625·3	6628·3	6631·2	6634·2	6637·1	2·9
246	6640·1	6643·0	6645·9	6648 9	6651·8	6654·8	6657·7	6660·6	6663·6	6666·5	2·9
247	4 6669·5	6672·4	6675·4	6678 3	6681·3	6684·2	6687·2	6690·1	6693·0	6696·0	2·9
248	6698·9	6701·9	6704·8	6707·8	6710·7	6713·7	6716·6	6719·6	6722·5	6725·5	2·9
249	6728·4	6731·3	6734·3	6737·2	6740·2	6743·1	6746·1	6749·0	6752·0	6754·9	2·9
250	4 6757·8	6760·7	6763·7	6766·7	6769·6	6772·6	6775·5	6778·4	6781·4	6784·3	2·9
251	6787·3	6790·2	6793·1	6796·1	6799·0	6802·0	6804·9	6807·8	6810·8	6813·7	2·9
252	6816·6	6819·6	6822·5	6825·4	6828·4	6831·3	6834·2	6837·1	6840·1	6843·0	2·9
253	4 6845·9	6848·8	6851·8	6854·7	6857·6	6860·5	6863·5	6866·4	6869·3	6872·2	2·9
254	6875·1	6878·1	6881·0	6883·9	6886·8	6889·7	6892·6	6895·6	6898·5	6901·4	2·9
255	6904·3	6907·2	6910·1	6913·0	6915·9	6918·8	6921·7	6924·6	6927·5	6930·4	2·9
256	4 6933·3	6936·2	6939·1	6942·0	6944·9	6947·8	6950·6	6953·5	6956·4	6959·3	2·9
257	6962·2	6965·0	6967·9	6970·8	6973·7	6976·5	6979·4	6982·3	6985·1	6988·0	2·9
258	6990·9	6993·7	6996·6	6999·4	7002·3	7005·1	7008·0	7010·8	7013·7	7016·5	2·9
259	4 7019·4	7022·2	7025·0	7027·9	7030·7	7033·5	7036·4	7039·2	7042·0	7044·8	2·8
260	7047·7	7050·5	7053·3	7056·1	7058·9	7061·7	7064·5	7067·4	7070·2	7073·0	2·8
261	7075·8	7078·6	7081·4	7084·2	7087·0	7089·7	7092·5	7095·3	7098·1	7100·9	2·8
262	4 7103·7	7106·5	7109·2	7112·0	7114·8	7117·6	7120·3	7123·1	7125·9	7128·6	2·8
263	7131·4	7134·2	7136·9	7139·7	7142·4	7145·2	7147·9	7150·7	7153·4	7156·2	2·8
264	7158·9	7161·7	7164·4	7167·1	7169·9	7172·6	7175·4	7178·1	7180·8	7183·5	2·7
265	4 7186·3	7189·0	7191·7	7194·4	7197·1	7199·9	7202·6	7205·3	7208·0	7210·7	2·7
266	7213·4	7216·1	7218·8	7221·5	7224·2	7226·9	7229·6	7232·3	7235·0	7237·7	2·7
267	7240·4	7243·1	7245·8	7248·5	7251·2	7253·8	7256·5	7259·2	7261·9	7264·5	2·7
268	4 7267·2	7269·9	7272·5	7275·2	7277·9	7280·5	7283·2	7285·9	7288·5	7291·2	2·7
269	7293·8	7296·5	7299·1	7301·8	7304·4	7307·1	7309·7	7312·3	7315·0	7317·6	2·6
270	7320·2	7322·9	7325·5	7328·1	7330·8	7333·4	7336·0	7338·6	7341·2	7343·9	2·6
271	4 7346·5	7349·1	7351·7	7354·3	7356·9	7359·5	7362·1	7364·7	7367·3	7369·9	2·6
272	7372·5	7375·1	7377·7	7380·3	7382·9	7385·5	7388·1	7390·7	7393·3	7395·8	2·6
273	7398·4	7401·0	7403·6	7406·2	7408·7	7411·3	7413·9	7416·4	7419·0	7421·6	2·6
274	4 7424·1	7426·7	7429·3	7431·8	7434·4	7436·9	7439·5	7442·0	7444·6	7447·1	2·6
275	7449·7	7452·2	7454·8	7457·3	7459·8	7462·4	7464·9	7467·4	7470·0	7472·5	2·5
276	7475·0	7477·5	7480·1	7482·6	7485·1	7487·6	7490·1	7492·7	7495·2	7497·7	2·5
277	4 7500·2	7502·7	7505·2	7507·7	7510·2	7512·7	7515·2	7517·7	7520·2	7522·7	2·5
278	7525·2	7527·7	7530·1	7532·6	7535·1	7537·6	7540·1	7542·6	7545·0	7547·5	2·5
279	7550·0	7552·4	7554·9	7557·4	7559·9	7562·3	7564·8	7567·2	7569·7	7572·2	2·5
280	4 7574·6	7577·1	7579·5	7582·0	7584·4	7586·8	7589·3	7591·7	7594·2	7596·6	2·4
281	7599·0	7601·5	7603·9	7606·4	7608·8	7611·2	7613·6	7616·1	7618·5	7620·9	2·4
282	7623·3	7625·7	7628·2	7630·6	7633·0	7635·4	7637·8	7640·2	7642·6	7645·0	2·4
283	4 7647·4	7649·8	7652·2	7654·6	7657·0	7659·4	7661·8	7664·2	7666·6	7669·0	2·4
284	7671·3	7673·7	7676·1	7678·5	7680·9	7683·3	7685·6	7688·0	7690·4	7692·7	2·4
285	7695·1	7697·5	7699·8	7702·2	7704·5	7706·9	7709·3	7711·6	7714·0	7716·4	2·4
286	4 7718·7	7721·1	7723·4	7725·8	7728·1	7730·4	7732·8	7735·1	7737·5	7739·8	2·3
287	7742·1	7744·5	7746·8	7749·1	7751·5	7753·8	7756·1	7758·4	7760·8	7763·1	2·3
288	7765·4	7767·7	7770·0	7772·4	7774·7	7777·0	7779·3	7781·6	7783·9	7786·2	2·3
289	4 7788·5	7790·8	7793·1	7795·4	7797·7	7800·0	7802·3	7804·6	7806·9	7809·2	2·3
290	7811·5										

Digitized by Google

Table V.

Deviation δ in degrees, between velocities V and v f/s.

$$\delta = C\,(D_V - D_v).$$

(By W. D. Niven, F.R.S.)

v,	0	1	2	3	4	5	6	7	8	9
f.s	degs.	degs.	degs.	degs.	degs.	degs.	degs.	degs.	degs.	degs.
40	0·0000	0·4838	0·9640	1·4407	1·9137	2·3830	2·8488	3·3110	3·7689	4·2240
41	4·6757	5·1240	5·5688	6·0101	6·4482	6·8828	7·3141	7·7421	8·1660	8·5874
42	9·0056	9·4207	9·8327	10·2410	10·6467	11·0496	11·4494	11·8462	12·2397	12·6306
43	13·0187	13·4039	13·7862	14·1652	14·5419	14·9159	15·2872	15·6557	16·0211	16·3843
44	16·7450	17·1030	17·4585	17·8110	18·1614	18·5094	18·8549	19·1980	19·5383	19·8766
45	20·2125	20·5460	20·8772	21·2054	21·5320	21·8565	22·1788	22·4989	22·8169	23·1327
46	23·4463	23·7578	24·0671	24·3736	24·6788	24·9821	25·2834	25·5827	25·8801	26·1756
47	26·4691	26·7607	27·0503	27·3376	27·6234	27·9075	28·1897	28·4702	28·7486	29·0254
48	29·3006	29·5739	29·8455	30·1151	30·3833	30·6498	30·9147	31·1779	31·4393	31·6993
49	31·9576	32·2143	32·4695	32·7227	32·9747	33·2253	33·4743	33·7219	33·9679	34·2125
50	34·4557	34·6973	34·9375	35·1761	35·4134	35·6493	35·8837	36·1167	36·3480	36·5783
51	36·8073	37·0349	37·2613	37·4862	37·7099	37·9323	38·1534	38·3731	38·5914	38·8086
52	39·0246	39·2394	39·4529	39·6651	39·8762	40·0860	40·2947	40·5022	44·7082	40·9135
53	41·1175	41·3204	41·5221	41·7225	41·9221	42·1205	42·3179	42·5142	42·7095	42·9037
54	43·0967	43·2887	43·4795	43·6690	43·8578	44·0456	44·2324	44·4182	44·6031	44·7870
55	44·9698	45·1516	45·3325	45·5122	45·6910	45·8689	46·0457	46·2217	46·3964	46·5705
56	46·7437	46·9160	47·0874	47·2581	47·4277	47·5965	47·7644	47·9314	48·0973	48·2625
57	48·4270	48·5906	48·7531	48·9153	49·0764	49·2368	49·3963	49·5551	49·7130	49·8701
58	50·0265	50·1822	50·3370	50·4909	50·6442	50·7968	50·9487	51·0999	51·2505	51·4002
59	51·5492	51·6975	51·8451	51·9917	52·1378	52·2832	52·4280	52·5721	52·7155	52·8583
60	53·0003	53·1417	53·2825	53·4224	53·5618	53·7005	53·8386	53·9761	54·1130	54·2492
61	54·3847	54·5196	54·6539	54·7875	54·9205	55·0529	55·1846	55·3158	55·4462	55·5761
62	55·7054	55·8342	55·9623	56·0899	56·2169	56·3433	56·4690	56·5942	56·7188	56·8428
63	56·9663	57·0891	57·2114	57·3330	57·4542	57·5749	57·6950	57·8146	57·9338	58·0523
64	58·1703	58·2878	58·4046	58·5209	58·6367	58·7521	58·8669	58·9832	59·0949	59·2081
65	59·3209	59·4332	59·5449	59·6562	59·7669	59·8772	59·9869	60·0961	60·2047	60·3130
66	60·4207	60·5280	60·6348	60·7411	60·8470	60·9523	61·0572	61·1616	61·2654	61·3688
67	61·4719	61·5744	61·6766	61·7783	61·8796	61·9804	62·0808	62·1807	62·2802	62·3793
68	62·4779	62·5761	62·6739	62·7711	62·8680	62·9646	63·0607	63·1565	63·2519	63·3468
69	63·4414	63·5356	63·6294	63·7227	63·8157	63·9084	64·0006	64·0924	64·1838	64·2749
70	64·3656	64·4559	64·5459	64·6356	64·7249	64·8137	64·9022	64·9903	65·0779	65·1652
71	65·2522	65·3388	65·4250	65·5107	65·5962	65·6813	65·7660	65·8504	65·9345	66·0182
72	66·1015	66·1845	66·2671	66·3494	66·4313	66·5128	66·5940	66·6749	66·7553	66·8355
73	66·9153	66·9949	67·0740	67·1529	67·2314	67·3096	67·3875	67·4649	67·5422	67·6190
74	67·6955	67·7717	67·8476	67·9231	67·9983	68·0733	68·1479	68·2223	68·2964	68·3702
75	68·4436	68·5168	68·5896	68·6620	68·7342	68·8062	68·8778	68·9492	69·0204	69·0912
76	69·1617	69·2318	69·3017	69·3712	69·4404	69·5094	69·5780	69·6464	69·7145	69·7823
77	69·8497	69·9169	69·9838	70·0503	70·1166	70·1826	70·2483	70·3137	70·3787	70·4436
78	70·5082	70·5725	70·6365	70·7004	70·7639	70·8271	70·8901	70·9527	71·0149	71·0770
79	71·1388	71·2004	71·2617	71·3228	71·3837	71·4442	71·5045	71·5646	71·6244	71·6839
80	71·7432	71·8023	71·8611	71·9196	71·9779	72·0359	72·0937	72·1513	72·2086	72·2656
81	72·3225	72·3791	72·4354	72·4915	72·5473	72·6030	72·6584	72·7135	72·7685	72·8232
82	72·8776	72·9317	72·9856	73·0393	73·0927	73·1458	73·1988	73·2514	73·3038	73·3560
83	73·4079	73·4596	73·5111	73·5622	73·6132	73·6639	73·7145	73·7648	73·8149	73·8647
84	73·9143	73·9636	74·0127	74·0615	74·1101	74·1585	74·2067	74·2546	74·3023	74·3498
85	74·3971	74·4441	74·4910	74·5376	74·5839	74·6301	74·6760	74·7217	74·7670	74·8123
86	74·8573	74·9022	74·9468	74·9912	75·0355	75·0795	75·1233	75·1669	75·2104	75·2536
87	75·2966	75·3395	75·3821	75·4246	75·4668	75·5089	75·5507	75·5924	75·6339	75·6752
88	75·7163	75·7572	75·7980	75·8385	75·8788	75·9190	75·9590	75·9988	76·0384	76·0778
89	76·1171	76·1562	76·1952	76·2339	76·2725	76·3109	76·3492	76·3873	76·4252	76·4629
90	76·5005	76·5379	76·5751	76·6121	76·6490	76·6857	76·7223	76·7588	76·7951	76·8312
91	76·8671	76·9029	76·9385	76·9739	77·0092	77·0444	77·0794	77·1142	77·1489	77·1835
92	77·2179	77·2522	77·2863	77·3203	77·3541	77·3878	77·4213	77·4547	77·4879	77·5210
93	77·5540	77·5868	77·6195	77·6520	77·6844	77·7167	77·7488	77·7807	77·8125	77·8442

Digitized by Google

TABLE V—*continued.*

$$\delta = C\,(D_r - D_v).$$

v.	0	1	2	3	4	5	6	7	8	9
f/s.	degs.	degs.	degs.	degs.	degs.	degs.	degs.	degs.	degs.	degs.
94	77·9757	77·9071	77·9384	77·9695	78·0005	78·0314	78·0622	78·0929	78·1234	78·1538
95	78·1841	78·2142	78·2442	78·2741	78·3039	78·3335	78·3630	78·3924	78·4216	78·4508
96	78·4798	78·5087	78·5375	78·5622	78·5947	78·6231	78·6514	78·6796	78·7076	78·7356
97	78·7634	78·7911	78·8188	78·8463	78·8736	78·9009	78·9280	78·9551	78·9819	79·0087
98	79·0354	79·0621	79·0886	79·1150	79·1413	79·1675	79·1936	79·2195	79·2454	79·2712
99	79·2968	79·3224	79·3478	79·3731	79·3983	79·4234	79·4484	79·4734	79·4982	79·5230
100	79·5476	79·5722	79·5966	79·6210	79·6543	79·6695	79·6935	79·7175	79·7414	79·7652
101	79·7889	79·8124	79·8359	79·8593	79·8826	79·9058	79·9289	79·9519	79·9748	79·9976
102	80·0203	80·0430	80·0655	80·0879	80·1102	80·1324	80·1544	80·1763	80·1981	80·2197
103	80·2412	80·2625	80·2837	80·3048	80·3256	80·3462	80·3667	80·3869	80·4071	80·4270
104	80·4466	80·4661	80·4854	80·5045	80·5234	80·5420	80·5605	80·5787	80·5967	80·6145
105	80·6321	80·6495	80·6667	80·6835	80·7003	80·7169	80·7333	80·7495	80·7654	80·7813
106	80·7970	80·8126	80·8280	80·8432	80·8583	80·8733	80·8882	80·9029	80·9175	80·9319
107	80·9463	80·9606	80·9747	80·9886	81·0026	81·0164	81·0301	81·0437	81·0573	81·0707
108	81·0841	81·0973	81·1105	81·1236	81·1366	81·1495	81·1624	81·1751	81·1877	81·2003
109	81·2129	81·2253	81·2377	81·2501	81·2623	81·2745	81·2866	81·2986	81·3105	81·3224
110	81·3342	81·3460	81·3571	81·3695	81·3811	81·3927	81·4042	81·4156	81·4269	81·4382
111	81·4495	81·4607	81·4719	81·4829	81·4939	81·5049	81·5159	81·5268	81·5377	81·5485
112	81·5593	81·5700	81·5807	81·5913	81·6019	81·6124	81·6230	81·6334	81·6439	81·6543
113	81·6647	81·6750	81·6853	81·6955	81·7057	81·7159	81·7260	81·7361	81·7462	81·7562
114	81·7662	81·7761	81·7861	81·7960	81·8058	81·8156	81·8254	81·8351	81·8448	81·8545
115	81·8641	81·8737	81·8833	81·8929	81·9024	81·9119	81·9213	81·9307	81·9401	81·9495
116	81·9588	81·9681	81·9774	81·9866	81·9958	82·0049	82·0141	82·0232	82·0322	82·0413
117	82·0503	82·0592	82·0682	82·0771	82·0860	82·0948	82·1036	82·1124	82·1212	82·1299
118	82·1386	82·1473	82·1559	82·1645	82·1731	82·1817	82·1902	82·1988	82·2073	82·2157
119	82·2241	82·2325	82·2408	82·2492	82·2575	82·2657	82·2740	82·2822	82·2903	82·2985
120	82·3066	82·3147	82·3228	82·3309	82·3389	82·3469	82·3549	82·3629	82·3708	82·3787
121	82·3865	82·3944	82·4022	82·4100	82·4178	82·4255	82·4333	82·4410	82·4486	82·4563
122	82·4639	82·4715	82·4790	82·4865	82·4940	82·5015	82·5090	82·5164	82·5238	82·5312
123	82·5386	82·5459	82·5533	82·5606	82·5679	82·5751	82·5824	82·5896	82·5968	82·6040
124	82·6112	82·6183	82·6254	82·6324	82·6395	82·6465	82·6535	82·6605	82·6675	82·6744
125	82·6814	82·6883	82·6951	82·7019	82·7088	82·7156	82·7224	82·7291	82·7359	82·7427
126	82·7494	82·7561	82·7627	82·7694	82·7760	82·7826	82·7892	82·7957	82·8023	82·8088
127	82·8153	82·8218	82·8283	82·8348	82·8412	82·8477	82·8541	82·0604	82·8668	82·8731
128	82·8794	82·8857	82·8920	82·8983	82·9045	82·9107	82·9169	82·9231	82·9292	82·9354
129	82·9415	82·9477	82·9538	82·9599	82·9660	82·9720	82·9780	82·9840	82·9900	82·9950
130	83·0019	83·0079	83·0138	83·0197	83·0256	83·0315	83·0373	83·0432	83·0490	83·0548
131	83·0606	83·0664	83·0721	83·0779	83·0836	83·0893	83·0950	83·1007	83·1063	83·1119
132	83·1176	83·1232	83·1288	83·1344	83·1400	83·1455	83·1511	83·1566	83·1621	83·1676
133	83·1730	83·1785	83·1840	83·1894	83·1949	83·2003	83·2057	83·2110	83·2164	83·2217
134	83·2271	83·2324	83·2377	83·2430	83·2483	83·2536	83·2588	83·2641	83·2693	83·2745
135	83·2797	83·2849	83·2900	83·2951	83·3003	83·3054	83·3105	83·3156	83·3207	83·3257
136	83·3308	83·3359	83·3409	83·3459	83·3509	83·3560	83·3609	83·3659	83·3709	83·3759
137	83·3808	83·3857	83·3906	83·3955	83·4004	83·4053	83·4101	83·4150	83·4198	83·4247
138	83·4295	83·4343	83·4391	83·4438	83·4486	83·4533	83·4581	83·4628	83·4676	83·4723
139	83·4770	83·4817	83·4863	83·4910	83·4956	83·5003	83·5049	83·5095	83·5141	83·5187
140	83·5233	83·5279	83·5325	83·5371	83·5417	83·5462	83·5507	83·5553	83·5598	83·5642
141	83·5687	83·5732	83·5777	83·5821	83·5866	83·5910	83·5954	83·5999	83·6043	83·6087
142	83·6130	83·6174	83·6218	83·6261	83·6305	83·6348	83·6392	83·6435	83·6478	83·6522
143	83·6565	83·6607	83·6650	83·6693	83·6735	83·6778	83·6820	83·6862	83·6904	83·6946
144	83·6988	83·7030	83·7072	83·7114	83·7156	83·7197	83·7239	83·7280	83·7321	83·7362
145	83·7403	83·7444	83·7485	83·7526	83·7567	83·7608	83·7649	83·7689	83·7730	83·7770
146	83·7810	83·7850	83·7891	83·7930	83·7970	83·8010	83·8050	83·8090	83·8130	83·8170
147	83·8209	83·8249	83·8288	83·8327	83·8366	83·8406	83·8445	83·8484	83·8522	83·8561
148	83·8600	83·8639	83·8677	83·8715	83·8754	83·8792	83·8830	83·8869	83·8907	83·8945
149	83·8983	83·9021	83·9059	83·9096	83·9134	83·9172	83·9209	83·9247	83·9285	83·9322
150	83·9359	83·9396	83·9433	83·9470	83·9507	83·9544	83·9581	83·9617	83·9654	83·9691
151	83·9727	83·9764	83·9800	83·9837	83·9873	83·9909	83·9946	83·9982	84·0018	84·0054
152	84·0090	84·0126	84·0161	84·0197	84·0233	84·0269	84·0304	84·0340	84·0375	84·0410
153	84·0446	84·0481	84·0516	84·0551	84·0587	84·0622	84·0657	84·0692	84·0727	84·0762

Digitized by Google

TABLE V—*continued.*

$$\delta = C\,(D_r - D_v).$$

v.	0	1	2	3	4	5	6	7	8	9
f/s.	degs.	degs.	degs.	degs.	degs.	degs.	degs.	degs.	degs.	degs.
154	84·0796	84·0831	84·0866	84·0900	84·0935	84·0969	84·1004	84·1038	84·1072	84·1106
155	84·1140	84·1174	84·1208	84·1242	84·1276	84·1310	84·1344	84·1378	84·1412	84·1445
156	84·1479	84·1513	84·1546	84·1579	84·1613	84·1646	85·1679	84·1713	84·1746	84·1779
157	84·1812	84·1845	84·1878	84·1911	84·1943	84·1976	84·2009	84·2041	84·2074	84·2107
158	84·2139	84·2172	84·2204	84·2237	84·2269	84·2301	84·2333	84·2366	84·2398	84·2430
159	84·2461	84·2493	84·2525	84·2557	84·2588	84·2620	84·2652	84·2683	84·2715	84·2746
160	84·2778	84·2809	84·2840	84·2871	84·2903	84·2933	84·2965	84·2996	84·3027	84·3058
161	84·3088	84·3119	84·3150	84·3180	84·3210	84·3242	84·3272	84·3302	84·3333	84·3363
162	84·3394	84·3424	84·3454	84·3484	84·3514	84·3544	84 3574	84·3604	84·3634	84·3664
163	84·3694	84·3724	84·3753	84·3783	84·3813	84·3843	84·3872	84·3902	84·3931	84·3960
164	84·3990	84·4019	84·4048	84·4078	84·4107	84·4136	84·4165	84·4194	84·4223	84·4252
165	84·4281	84·4310	84·4339	84·4367	85·4396	94·4425	84·4453	84·4482	84·4510	84·4539
166	84·4567	84·4595	84·4624	84·4652	84·4680	84·4709	84·4737	84·4765	84·4793	84·4821
167	84·4849	84·4877	84·4905	84·4933	84·4961	84·4988	84·5016	84·5044	84·5070	84·5099
168	84·5127	84·5154	84·5181	84·5209	84·5236	84·5263	84·5291	84·5318	84·5345	84·5372
169	84·5399	84·5426	84·5453	84·5480	84·5508	84·5534	84·5561	84·5588	84·5615	84·5641
170	84·5668	84·5695	84·5721	84·5748	84·5775	84·5801	84·5828	84·5854	84·5880	84·5907
171	84·5933	84·5959	84·5985	84·6012	84·6038	84·6064	84·6090	84·6116	84·6142	84·6168
172	84·6193	84·6219	84·6245	84·6271	84·6297	84·6322	84·6348	84·6373	84·6399	84·6424
173	84·6449	84·6475	84·6500	84·6525	84·6550	84·6575	84·6601	84·6626	84·6651	84·6676
174	84·6701	84·6726	84·6750	84·6776	84·6800	84·6825	84·6850	84·6875	84·6899	84·6924
175	84·6948	84·6973	84·6997	84·7022	84·7046	84·7071	84·7095	84·7119	84·7144	84·7168
176	84·7192	84·7216	84·7240	84·7264	84·7288	84·7312	84·7336	84·7360	84·7384	84·7408
177	84·7432	84·7455	84·7479	84·7503	84·7526	84·7550	84·7574	84·7597	84·7621	84·7645
178	84·7668	84·7692	84·7715	84·7739	84·7762	84·7785	84·7809	84·7832	84·7855	84·7878
179	84·7902	84·7925	84·7948	84·7972	84·7994	84·8017	84·8040	84·8063	84·8086	84·8109
180	84·8131	84·8154	84·8177	84·8199	84·8222	84·8244	84·8267	84·8289	84·8312	84·8334
181	84·8357	84·8379	84·8401	84·8424	84·8446	84·8468	84·8490	84·8513	84·8535	84·8557
182	84·8579	84·8601	84·8623	84·8645	84·8667	84·8689	84·8711	84·8732	84·8754	84·8776
183	84·8798	84·8819	84·8841	84·8863	84·8884	84·8906	84·8927	84·8949	84·8970	84·8992
184	84·9013	84·9035	84·9056	84·9077	84·9099	84·9120	84·9141	84·9162	84·9184	84·9205
185	84·9226	84·9476	84·9268	84·9289	84·9310	84·9331	84·9351	84·9372	84·9393	84·9414
186	84·9435	84·9456	84·9476	84·9497	84·9518	84·9538	84·9559	84·9580	84·9600	84·9621
187	84·9641	84·9662	84·9682	84·9702	84·9723	84·9743	84·9763	84·9784	84·9804	84·9824
188	84·9845	84·9865	84·9885	84·9905	84·9925	84·9946	84·9966	84·9986	85·0006	85·0026
189	85·0045	85·0065	85·0085	85·0105	85·0125	85·0145	85·0165	85·0185	85·0204	85·0224
190	85·0244	85·0263	85·0283	85·0303	85·0322	85·0342	85·0361	85·0380	85·0400	85·0419
191	85·0438	85·0458	85·0477	85·0496	85·0515	85·0535	85·0554	85·0573	85·0592	85·0611
192	85·0630	85·0650	85·0669	85·0687	85·0706	85·0725	85·0744	85·0763	85·0782	85·0801
193	85·0820	85·0838	85·0857	85·0876	85·0895	85·0913	85·0932	85·0951	85·0969	85·0988
194	85·1006	85·1025	85·1043	85·1062	85·1080	85·1099	85·1117	85·1136	85·1154	85·1172
195	85·1190	85·1208	85·1227	85·1245	85·1263	85·1281	85·1299	85·1317	85·1335	85·1353
196	85·1371	85·1389	85·1407	85·1425	85·1443	85·1460	85·1478	85·1496	85·1514	85·1531
197	85·1549	85·1567	85·1584	85·1602	85·1619	85·1637	85·1654	85·1672	85·1689	85·1707
198	85·1724	85·1741	85·1759	85·1776	85·1793	85·1810	85·1827	85·1844	85·1862	85·1879
199	85·1896	85·1913	85·1930	85·1947	85·1964	85·1981	85·1998	85·2014	85·2031	85·2048
200	85·2065	85·2081	85·2098	85·2115	85·2131	85·2148	85·2165	85·2181	85·2198	85·2214
201	85·2231	85·2247	85·2264	85·2280	85·2296	85·2313	85·2329	85·2346	85·2362	85·2378
202	85·2394	85·2411	85·2427	85·2443	85·2459	85·2476	85·2492	85·2507	85·2524	85·2540
203	85·2556	85·2572	85·2588	85·2604	85·2620	85·2635	85·2651	85·2667	85·2682	85·2698
204	85·2714	85·2729	85·2745	85·2760	85·2776	85·2791	85·2807	85·2822	85·2838	85·2853
205	85·2868	85·2884	85·2899	85·2915	85·2930	85·2945	85·2960	85·2975	85·2990	85·3005
206	85·3020	85·3035	85·3051	85·3066	85·3081	85·3095	85·3110	85·3125	85·3140	85·3155
207	85·3170	85·3184	85·3199	85·3214	85·3229	85·3244	85·3258	85·3273	85·3287	85·3302
208	85·3316	85·3331	85·3345	85·3360	85·3373	85·3388	85·3403	85·3417	85·3431	85·3446
209	85·3460	85·3474	85·3488	85·3503	85·3517	85·3531	85·3545	85·3559	85·3573	85·3587
210	85·3601	85·3615	85·3629	85·3643	85·3657	85·3671	85·3685	85·3698	85·3712	85·3726
211	85·3740	85·3754	85·3767	85·3781	85·3795	85·3808	85·3822	85·3836	85·3849	85·3863
212	85·3876	85·3890	85·3903	85·3917	85·3930	85·3943	85·3957	85·3970	85·3983	85·3996
213	85·4010	85·4023	85·4036	85·4049	85·4063	85·4076	85·4089	85·4102	85·4115	85·4128

Digitized by Google

TABLE V—*continued.*

$$\delta = C\,(D_r - D_c).$$

v.	0	1	2	3	4	5	6	7	8	9
f/s.	degs.	degs.	degs.	degs.	degs.	degs.	degs.	degs.	degs.	degs.
214	85·4141	85·4154	85·4167	85·4180	85·4193	85·4206	85·4219	85·4232	85·4245	85·4258
215	85·4271	85·4284	85·4297	85·4309	85·4322	85·4335	85·4348	85·4360	85·4373	85·4385
216	85·4398	85·4411	85·4423	85·4436	85·4448	85·4461	85·4473	85·4485	85·4498	85·4510
217	85·4523	85·4535	85·4547	85·4560	85·4572	85·4584	85·4597	85·4609	85·4621	85·4633
218	85·4645	85·4658	85·4670	85·4682	85·4694	85·4706	85·4718	85·4730	85·4742	85·4754
219	85·4766	85·4778	85·4790	85·4802	85·4814	85·4825	85·4837	85·4849	85·4861	85·4872
220	85·4885	85·4896	85·4908	85·4920	85·4932	85·4943	85·4955	85·4967	85·4978	85·4990
221	85·5001	85·5013	85·5024	85·5036	85·5047	85·5059	85·5070	85·5082	85·5093	85·5105
222	85·5116	85·5128	85·5139	85·5150	85·5162	85·5173	85·5184	85·5195	85·5207	85·5218
223	85·5229	85·5240	85·5251	85·5262	85·5273	85·5285	85·5296	85·5307	85·5318	85·5329
224	85·5340	85·5351	85·5362	85·5373	85·5384	85·5394	85·5405	85·5416	85·5427	85·5438
225	85·5449	85·5460	85·5470	85·5481	85·5492	85·5502	85·5513	85·5524	85·5534	85·5545
226	85·5556	85·5566	85·5577	85·5588	85·5598	85·5609	85·5619	85·5630	85·5640	85·5651
227	85·5661	85·5672	85·5682	85·5693	85·5703	85·5713	85·5724	85·5734	85·5744	85·5755
228	85·5765	85·5775	85·5785	85·5796	85·5806	85·5816	85·5826	85·5836	85·5846	85·5856
229	85·5866	85·5876	85·5886	85·5896	85·5906	85·5916	85·5926	85·5936	85·5946	85·5956
230	85·5966	85·5976	85·5986	85·5996	85·6006	85·6015	85·6025	85·6035	85·6045	85·6055
231	85·6064	85·6074	85·6084	85·6094	85·6103	85·6113	85·6123	85·6132	85·6142	85·6151
232	85·6161	85·6171	85·6180	85·6190	85·6199	85·6209	85·6218	85·6228	85·6237	85·6247
233	85·6256	85·6265	85·6275	85·6284	85·6294	85·6303	85·6312	85·6321	85·6331	85·5340
234	85·6349	85·6358	85·6367	85·6377	85·6386	85·6395	85·6404	85·6413	85·6422	85·6431
235	85·6441	85·6450	85·6459	85·6468	85·6477	85·6486	85·6495	85·6504	85·6513	85·6522
236	85·6531	85·6540	85·6549	85·6558	85·6566	85·6575	85·6584	85·6593	85·6602	85·6611
237	85·6619	85·6628	85·6637	85·6646	85·6654	85·6663	85·6672	85·6680	85·6689	85·6698
238	85·6706	85·6715	85·6724	85·6732	85·6741	85·6749	85·6758	85·6766	85·6775	85·6783
239	85·6792	85·6800	85·6809	85·6817	85·6826	85·6834	85·6843	85·6851	85·6859	85·6868
240	85·6876	85·6885	85·6893	85·6901	85·6909	85·6918	85·6926	85·6934	85·6942	85·6951
241	85·6959	85·6967	85·6975	85·6984	85·6992	85·7000	85·7008	85·7016	85·7024	85·7032
242	85·7041	85·7049	85·7057	85·7065	85·7073	85·7081	85·7089	85·7097	85·7105	85·7113
243	85·7121	85·7128	85·7136	85·7144	85·7152	85·7160	85·7168	85·7176	85·7184	85·7192
244	85·7200	85·7207	85·7215	85·7223	85·7231	85·7239	85·7246	85·7254	85·7262	85·7270
245	85·7277	85·7285	85·7293	85·7301	85·7308	85·7316	85·7324	85·7331	85·7339	85·7346
246	85·7354	85·7362	85·7369	85·7377	85·7384	85·7392	85·7399	85·7407	85·7414	85·7422
247	85·7429	85·7436	85·7444	85·7451	85·7459	85·7466	85·7474	85·7481	85·7488	85·7496
248	85·7503	85·7510	85·7517	85·7525	85·7532	85·7539	85·7547	85·7554	85·7561	85·7568
249	85·7575	85·7583	85·7590	85·7597	85·7604	85·7611	85·7618	85·7626	85·7633	85·7640

Digitized by Google

Table VI.

Inclination, or I(v) Table.

$$\tan \phi - \tan \theta = C\,(I_v - I_v).$$

v.	0	1	2	3	4	5	6	7	8	9	Δ
50	0·00000	0·00421	0·00839	0·01255	0·01669	0·02080	0·02489	0·02896	0·03300	0·03702	410
51	·04101	·04497	·04891	·05283	·05673	·06061	·06446	·06829	·07210	·07589	387
52	·07966	·08340	·08712	·09082	·09450	·09816	·10180	·10542	·10902	·11260	365
53	·11616	·11969	·12321	·12671	·13019	·13365	·13709	·14051	·14391	·14729	345
54	·15066	·15400	·15732	·16063	·16392	·16719	·17045	·17369	·17691	·18011	326
55	·18330	·18647	·18962	·19275	·19587	·19897	·20205	·20512	·20817	·21121	309
56	·21423	·21713	·22021	·22318	·22613	·22907	·23200	·23491	·23781	·24069	293
57	·24356	·24641	·24925	·25207	·25488	·25767	·26045	·26321	·26596	·26870	279
58	·27142	·27413	·27683	·27951	·28218	·28484	·28749	·29012	·29274	·29535	265
59	·29795	·30054	·30311	·30567	·30822	·31076	·31328	·31579	·31829	·32078	253
60	·32325	·32571	·32816	·33060	·33303	·33545	·33786	·34026	·34265	·34503	242
61	·34740	·34975	·35209	·35442	·35674	·35905	·36135	·36364	·36592	·36818	230
62	·37043	·37267	·37490	·37712	·37933	·38153	·38373	·38592	·38810	·39027	220
63	·39243	·39458	·39672	·39885	·40097	·40308	·40517	·40725	·40932	·41138	210
64	·41343	·41548	·41752	·41955	·42157	·42358	·42558	·42757	·42955	·43152	201
65	·43349	·43545	·43740	·43934	·44127	·44319	·44510	·44700	·44890	·45079	192
66	·45267	·45454	·45640	·45825	·46009	·46193	·46376	·46558	·46739	·46920	183
67	·47100	·47279	·47457	·47634	·47811	·47987	·48162	·48336	·48509	·48682	175
68	·48854	·49025	·49196	·49366	·49535	·49703	·49871	·50038	·50204	·50370	168
69	·50535	·50699	·50863	·51026	·51188	·51350	·51511	·51671	·51830	·51989	161
70	·52147	·52304	·52461	·52617	·52773	·52928	·53082	·53236	·53389	·53541	155
71	·53693	·53844	·53994	·54144	·54293	·54442	·54590	·54737	·54884	·55030	148
72	·55175	·55320	·55464	·55607	·55750	·55892	·56034	·56175	·56315	·56455	142
73	·56594	·56733	·56871	·57008	·57145	·57281	·57417	·57552	·57687	·57821	136
74	·57954	·58087	·58219	·58351	·58482	·58613	·58743	·58873	·59002	·59131	131
75	·59259	·59387	·59514	·59641	·59767	·59893	·60018	·60142	·60266	·60389	125
76	·60512	·60634	·60756	·60877	·60998	·61118	·61238	·61357	·61476	·61594	120
77	·61712	·61829	·61946	·62062	·62178	·62293	·62408	·62522	·62635	·62748	115
78	·62860	·62972	·63084	·63195	·63306	·63416	·63526	·63635	·63744	·63852	110
79	·63960	·64067	·64174	·64281	·64387	·64492	·64597	·64702	·64806	·64910	105
80	·65013	·65116	·65219	·65321	·65423	·65524	·65625	·65725	·65825	·65924	101
81	·66023	·66122	·66220	·66318	·66415	·66512	·66609	·66705	·66801	·66896	97
82	·66991	·67086	·67180	·67274	·67367	·67460	·67522	·67644	·67735	·67826	93
83	·67916	·68006	·68096	·68185	·68274	·68362	·68450	·68537	·68624	·68711	88
84	·68797	·68883	·68969	·69054	·69139	·69223	·69307	·69391	·69474	·69557	84
85	·69639	·69721	·69803	·69884	·69965	·70045	·70125	·70205	·70284	·70363	80

Digitized by Google

TABLE VI—*continued.*

$$\tan \phi - \tan \theta = C(I_V - I_v).$$

v.	0	1	2	3	4	5	6	7	8	9	Δ
86	0·70442	0·70520	0·70598	0·70676	0·70753	0·70830	0·70907	0·70983	0·71059	0·71134	77
87	·71209	·71284	·71358	·71432	·71506	·71579	·71652	·71725	·71797	·71869	73
88	·71941	·72012	·72083	·72154	·72224	·72294	·72364	·72434	·72503	·72572	70
89	·72641	·72709	·72777	·72845	·72912	·72979	·73046	·73112	·73178	·73244	67
90	·73310	·73375	·73440	·73505	·73569	·73633	·73697	·73761	·73824	·73887	64
91	·73950	·74012	·74074	·74136	·74198	·74259	·74320	·74381	·74442	·74502	61
92	·74562	·74622	·74681	·74740	·74799	·74858	·74916	·74974	·75032	·75090	59
93	·75148	·75205	·75262	·75319	·75376	·75432	·75488	·75544	·75600	·75655	56
94	·75710	·75765	·75820	·75874	·75928	·75982	·76036	·76089	·76142	·76195	54
95	·76248	·76301	·76353	·76405	·76457	·76509	·76560	·76611	·76662	·76713	52
96	·76764	·76814	·76864	·76914	·76964	·77014	·77063	·77112	·77161	·77210	50
97	·77259	·77307	·77355	·77403	·77451	·77499	·77546	·77593	·77640	·77687	48
98	·77734	·77780	·77826	·77872	·77918	·77964	·78010	·78055	·78100	·78145	46
99	·78190	·78235	·78279	·78323	·78367	·78411	·78455	·78499	·78542	·78585	44
100	·78628	·78671	·78714	·78757	·78799	·78841	·78883	·78925	·78967	·79008	42
101	·79049	·79090	·79131	·79172	·79212	·79252	·79292	·79332	·79372	·79412	40
102	·79452	·79492	·79531	·79570	·79609	·79648	·79686	·79724	·79762	·79800	39
103	·79837	·79874	·79911	·79948	·79984	·80020	·80056	·80091	·80126	·80161	36
104	·80195	·80229	·80262	·80295	·80328	·80360	·80392	·80424	·80455	·80486	32
105	·80517	·80547	·80577	·80606	·80635	·80664	·80692	·80720	·80748	·80776	29
106	·80803	·80830	·80856	·80882	·80908	·80934	·80960	·80986	·81011	·81036	26
107	·81061	·81086	·81111	·81135	·81159	·81183	·81207	·81231	·81255	·81278	24
108	·81301	·81324	·81347	·81370	·81393	·81415	·81437	·81459	·81481	·81503	22
109	·81525	·81547	·81568	·81589	·81610	·81631	·81652	·81673	·81694	·81715	21
110	·81736	·81756	·81776	·81796	·81816	·81836	·81856	·81876	·81896	·81916	20
111	·81936	·81956	·81975	·81994	·82013	·82032	·82051	·82070	·82089	·82108	19
112	·82127	·82146	·82165	·82184	·82203	·82221	·82239	·82257	·82275	·82293	18
113	·82311	·82329	·82347	·82365	·82383	·82401	·82419	·82437	·82454	·82471	18
114	·82488	·82506	·82523	·82540	·82557	·82574	·82591	·82608	·82625	·82642	17
115	·82659	·82676	·82693	·82710	·82727	·82744	·82760	·82776	·82792	·82808	17
116	·82824	·82840	·82856	·82872	·82888	·82904	·82920	·82936	·82952	·82968	16
117	·82983	·82999	·83014	·83030	·83045	·83061	·83076	·83092	·83107	·83122	15
118	·83137	·83152	·83167	·83182	·83197	·83212	·83227	·83242	·83257	·83272	15
119	·83286	·83301	·83315	·83330	·83344	·83359	·83373	·83388	·83402	·83416	14
120	·83430	·83444	·83458	·83472	·83486	·83500	·83514	·83528	·83542	·83556	14
121	·83569	·83583	·83596	·83610	·83623	·83637	·83650	·83664	·83677	·83691	14
122	·83704	·83717	·83730	·83743	·83756	·83769	·83782	·83795	·83808	·83821	13
123	·83834	·83847	·83860	·83873	·83885	·83898	·83910	·83923	·83935	·83948	13
124	·83960	·83973	·83985	·83998	·84010	·84022	·84034	·84046	·84058	·84070	12
125	·84082	·84094	·84106	·84118	·84130	·84142	·84154	·84166	·84178	·84190	12
126	·84201	·84213	·84224	·84236	·84247	·84259	·84270	·84282	·84293	·84305	12
127	·84316	·84328	·84339	·84351	·84362	·84373	·84384	·84395	·84406	·84417	11

Digitized by Google

TABLE VI—*continued.*

$\tan \phi - \tan \theta = C(I_r - I_v)$.

v.	0	1	2	3	4	5	6	7	8	9	Δ
128	0·84428	0·84439	0·84450	0·84461	0·84472	0·84483	0·84494	0·84505	0·84515	0·84526	11
129	·84536	·84547	·84557	·84568	·84578	·84589	·84599	·84610	·84620	·84631	11
130	·84641	·84652	·84662	·84673	·84683	·84693	·84703	·84713	·84723	·84733	10
131	·84743	·84753	·84763	·84773	·84783	·84793	·84803	·848129	·848228	·848327	100
132	·848425	·848523	·848621	·848718	·848815	·848912	·849009	·849105	·849201	·849297	97
133	·849393	·849488	·849583	·849678	·849773	·849867	·849961	·850055	·850149	·850242	94
134	·850335	·850428	·850521	·850613	·850705	·850797	·850888	·850979	·851070	·851161	92
135	·851252	·851342	·851432	·851522	·851612	·851701	·851790	·851879	·851968	·852057	89
136	·852145	·852233	·852321	·852409	·852496	·852583	·852670	·852757	·852844	·852930	87
137	·853016	·853102	·853188	·853274	·853359	·853444	·853529	·853614	·853698	·853782	85
138	·853866	·853950	·854034	·854118	·854201	·854284	·854367	·854450	·854532	·854614	83
139	·854696	·854778	·854860	·854941	·855022	·855103	·855184	·855265	·855346	·855426	81
140	·855506	·855586	·855666	·855746	·855825	·855904	·855983	·856062	·856141	·856219	79
141	·856297	·856375	·856453	·856531	·856609	·856686	·856763	·856840	·856917	·856994	77
142	·857071	·857148	·857224	·857300	·857376	·857452	·857528	·857603	·857678	·857753	76
143	·857828	·857903	·857978	·858052	·858126	·858200	·858274	·858348	·858422	·858495	74
144	·858568	·858641	·858714	·858787	·858860	·858933	·859005	·859077	·859149	·859221	73
145	·859293	·859365	·859437	·859508	·859579	·859650	·859721	·859792	·859863	·859933	71
146	·860003	·860073	·860143	·860213	·860283	·860353	·860422	·860491	·860560	·860629	70
147	·860698	·860767	·860836	·860904	·860972	·861040	·861108	·861176	·861244	·861312	68
148	·861380	·861448	·861515	·861582	·861649	·861716	·861783	·861850	·861917	·861983	67
149	·862049	·862115	·862181	·862247	·862313	·862379	·862445	·862510	·862575	·862640	66
150	·862705	·862770	·862835	·862900	·862965	·863029	·863093	·863157	·863221	·863285	64
151	·863349	·863413	·863477	·863541	·863604	·863667	·863730	·863793	·863856	·863919	63
152	·863982	·864045	·864108	·864170	·864232	·864294	·864356	·864418	·864480	·864542	62
153	·864604	·864666	·864728	·864789	·864850	·864911	·864972	·865033	·865094	·865155	61
154	·865216	·865277	·865337	·865397	·865457	·865517	·865577	·865637	·865697	·865757	60
155	·865817	·865877	·865936	·865995	·866054	·866113	·866172	·866231	·866290	·866349	59
156	·866408	·866467	·866525	·866583	·866641	·866699	·866757	·866815	·866873	·866931	58
157	·866989	·867047	·867104	·867161	·867218	·867275	·867332	·867389	·867446	·867503	57
158	·867560	·867617	·867674	·867730	·867786	·867842	·867898	·867954	·868010	·868066	56
159	·868122	·868178	·868234	·868290	·868345	·868400	·868455	·868510	·868565	·868620	55
160	·868675	·868730	·868785	·868840	·868894	·868948	·869002	·869056	·869110	·869164	54
161	·869218	·869272	·869326	·869380	·869434	·869487	·869540	·869593	·869646	·869699	53
162	·869752	·869805	·869858	·869911	·869964	·870017	·870069	·870121	·870173	·870225	53
163	·870277	·870329	·870381	·870433	·870485	·870537	·870589	·870641	·870692	·870743	52
164	·870794	·870845	·870896	·870947	·870998	·871049	·871100	·871151	·871202	·871252	51
165	·871302	·871352	·871402	·871452	·871502	·871552	·871602	·871652	·871702	·871752	50
166	·871802	·871852	·871902	·871951	·872000	·872049	·872098	·872147	·872196	·872245	49
167	·872294	·872343	·872392	·872441	·872490	·872538	·872586	·872634	·872682	·872730	48
168	·872778	·872826	·872874	·872922	·872970	·873018	·873066	·873113	·873160	·873207	48
169	·873254	·873301	·873348	·873395	·873442	·873489	·873536	·873583	·873629	·873676	47

Digitized by Google

TABLE VI—*continued.*

$$\tan \phi - \tan \theta = C(I_v - I_v)$$

v.	0	1	2	3	4	5	6	7	8	9	Δ
170	0·873722	0·873769	0·873815	0·873861	0·873907	0·873953	0·873999	0·874045	0·874091	0·874137	46
171	·874183	·874229	·874275	·874321	·874366	·874411	·874456	·874501	·874546	·874591	45
172	·874636	·874681	·874726	·874771	·874816	·874861	·874906	·874950	·874994	·875038	45
173	·875082	·875126	·875170	·875214	·875258	·875302	·875346	·875390	·875434	·875478	44
174	·875521	·875565	·875608	·875652	·875695	·875738	·875781	·875824	·875867	·875910	43
175	·875953	·875996	·876039	·876082	·876125	·876168	·876210	·876252	·876294	·876336	43
176	·876378	·876420	·876462	·876504	·876546	·876588	·876630	·876672	·876714	·876756	42
177	·876797	·876839	·876880	·876922	·876963	·877004	·877045	·877086	·877127	·877168	41
178	·877209	·877250	·877291	·877332	·877373	·877414	·877455	·877495	·877535	·877575	41
179	·877615	·877655	·877695	·877735	·877775	·877815	·877855	·877895	·877935	·877975	40
180	·878015	·878055	·878095	·878135	·878174	·878213	·878252	·878291	·878330	·878369	39
181	·878408	·878447	·878486	·878525	·878564	·878603	·878642	·878681	·878719	·878758	39
182	·878796	·878835	·878873	·878912	·878950	·878988	·879026	·879064	·879102	·879140	38
183	·879178	·879216	·879254	·879292	·879330	·879368	·879406	·879443	·879480	·879517	38
184	·879554	·879591	·879628	·879665	·879702	·879739	·879776	·879813	·879850	·879887	37
185	·879924	·879961	·879998	·880035	·880072	·880109	·880145	·880181	·880217	·880253	37
186	·880289	·880325	·880361	·880397	·880433	·880469	·880505	·880541	·880577	·880613	36
187	·880649	·880685	·880721	·880757	·880793	·880829	·880864	·880899	·880934	·880969	36
188	·881004	·881039	·881074	·881109	·881144	·881179	·881214	·881249	·881284	·881319	35
189	·881354	·881389	·881424	·881459	·881494	·881529	·881563	·881597	·881631	·881665	35
190	·881699	·881733	·881767	·881801	·881835	·881869	·881903	·881937	·881971	·882005	34
191	·882039	·882073	·882107	·882141	·882175	·882209	·882242	·882275	·882308	·882341	34
192	·882374	·882407	·882440	·882473	·882506	·882539	·882572	·882605	·882638	·882671	33
193	·882704	·882737	·882770	·882803	·882836	·882869	·882901	·882933	·882965	·882997	33
194	·883029	·883061	·883093	·883125	·883157	·883189	·883221	·883253	·883285	·883317	32
195	·883349	·883381	·883413	·883445	·883477	·883509	·883541	·883572	·883603	·883634	32
196	·883665	·883697	·883728	·883759	·883790	·883821	·883852	·883883	·883914	·883945	31
197	·883976	·884007	·884038	·884069	·884100	·884131	·884161	·884191	·884221	·884251	31
198	·884281	·884311	·884341	·884371	·884401	·884431	·884461	·884491	·884521	·884551	30
199	·884581	·884611	·884641	·884671	·884701	·884731	·884760	·884789	·884818	·884847	30
200	·884876	·884905	·884934	·884963	·884992	·885021	·885050	·885079	·885108	·885137	29
201	·885166	·885195	·885224	·885253	·885282	·885311	·885339	·885367	·885395	·885423	29
202	·885451	·885479	·885507	·885535	·885563	·885591	·885619	·885647	·885675	·885703	28
203	·885731	·885759	·885787	·885815	·885843	·885871	·885898	·885925	·885952	·885979	28
204	·886006	·886033	·886060	·886087	·886114	·886141	·886168	·886195	·886222	·886249	27
205	·886276	·886303	·886330	·886357	·886384	·886411	·886437	·886463	·886489	·886515	27
206	·886541	·886567	·886593	·886619	·886645	·886671	·886697	·886723	·886749	·886775	26
207	·886801	·886827	·886853	·886879	·886905	·886931	·886957	·886982	·887007	·887032	26
208	·887057	·887083	·887108	·887133	·887158	·887183	·887208	·887233	·887258	·887283	25
209	·887308	·887333	·887358	·887383	·887408	·887433	·887457	·887482	·887506	·887531	25
210	·887555	·887580	·887604	·887629	·887653	·887677	·887701	·887725	·887749	·887773	24
211	·887797	·887821	·887845	·887869	·887893	·887917	·887941	·887965	·887988	·888012	24

Digitized by Google

TABLE VI—*continued.*

$$\tan \phi - \tan \theta = C(I_r - I_v).$$

v.	0	1	2	3	4	5	6	7	8	9	Δ
212	0·888035	0·888059	0·888082	0·888106	0·888129	0·888153	0·888176	0·888200	0·888223	0·888246	23
213	·888269	·888292	·888315	·888338	·888361	·888384	·888407	·888430	·888453	·888476	23
214	·888499	·888522	·888545	·888568	·888590	·888613	·888635	·888658	·888680	·888703	23
215	·888725	·888748	·888770	·888793	·888815	·888837	·888859	·888881	·888903	·888925	22
216	·888947	·888969	·888991	·889013	·889035	·889057	·889079	·889101	·889122	·889144	22
217	·889165	·889187	·889208	·889230	·889251	·889273	·889294	·889316	·889337	·889358	21
218	·889379	·889401	·889422	·889433	·889464	·889485	·889506	·889527	·889548	·889569	21
219	·889590	·889611	·889632	·889653	·889674	·889695	·889715	·889736	·889756	·889777	21
220	·889797	·889818	·889838	·889859	·889879	·889900	·889920	·889941	·889961	·889981	20
221	·890001	·890021	·890041	·890061	·890081	·890101	·890121	·890141	·890161	·890181	20
222	·890201	·890221	·890241	·890261	·890281	·890301	·890320	·890340	·890359	·890379	20
223	·890398	·890418	·890437	·890457	·890476	·890496	·890515	·890534	·890553	·890572	19
224	·890591	·890610	·890629	·890648	·890677	·890686	·890705	·890724	·890743	·890762	19
225	·890781	·890800	·890819	·890838	·890857	·890876	·890894	·890913	·890931	·890954	19
226	·890968	·890986	·891005	·891023	·891042	·891060	·891079	·891097	·891116	·891134	19
227	·891152	·891171	·891189	·891207	·891225	·891243	·891261	·891279	·891297	·891315	18
228	·891333	·891351	·891369	·891387	·891405	·891423	·891441	·891459	·891477	·891495	18
229	·891512	·891530	·891548	·891566	·891584	·891601	·891619	·891636	·891654	·891671	18
230	·891689	·891706	·891724	·891741	·891759	·891776	·891794	·891811	·891829	·891846	18
231	·891864	·891881	·891899	·891916	·891934	·891951	·891969	·891986	·892003	·892020	17
232	·892037	·892055	·892072	·892090	·892107	·892124	·892141	·892158	·892175	·892192	17
233	·892209	·892227	·892244	·892261	·892278	·892295	·892312	·892329	·892346	·892363	17
234	·892380	·892397	·892414	·892431	·892448	·892465	·892482	·892499	·892516	·892533	17
235	·892549	·892566	·892583	·892600	·892617	·892634	·892651	·892668	·892684	·892701	17
236	·892717	·892734	·892751	·892768	·892785	·892802	·892818	·892835	·892851	·892868	17
237	·892884	·892901	·892918	·892935	·892951	·892968	·892984	·893001	·893017	·893034	17
238	·893050	·893067	·893083	·893100	·893116	·893133	·893149	·893166	·893182	·893199	17
239	·893215	·893232	·893248	·893265	·893281	·893298	·893314	·893330	·893346	·893362	16
240	·893378	·893395	·893411	·893428	·893444	·893460	·893476	·893492	·893508	·893524	16
241	·893540	·893557	·893573	·893589	·893605	·893621	·893637	·893653	·893669	·893685	16
242	·893701	·893717	·893733	·893749	·893765	·893781	·893797	·893813	·893829	·893845	16
243	·893861	·893877	·893893	·893909	·893925	·893941	·893957	·893973	·893989	·894005	16
244	·894020	·894036	·894052	·894068	·894084	·894100	·894116	·894132	·894147	·894163	16
245	·894178	·894194	·894210	·894226	·894242	·894258	·894273	·894289	·894304	·894320	16
246	·894335	·894351	·894367	·894383	·894398	·894414	·894429	·894445	·894460	·894476	16
247	·894491	·894507	·894522	·894538	·894553	·894569	·894584	·894600	·894615	·894631	16
248	·894646	·894662	·894677	·894693	·894708	·894724	·894739	·894755	·894770	·894785	15
249	·894800	·894816	·894831	·894847	·894862	·894877	·894892	·894907	·894922	·894937	15
250	·894952	·894968	·894983	·894998	·895013	·895028	·895043	·895058	·895073	·895088	15
251	·895103	·895118	·895133	·895148	·895163	·895178	·895193	·895208	·895223	·895238	15
252	·895253	·895268	·895283	·895298	·895313	·895328	·895343	·895358	·895372	·895387	15
253	·895401	·895416	·895431	·895446	·895461	·895476	·895490	·895505	·895519	·895534	15

Digitized by Google

TABLE VI—*continued.*

$$\tan \phi - \tan \theta = C(I_r - I_v).$$

v.	0	1	2	3	4	5	6	7	8	9	Δ
254	0·895548	0·895563	0·895577	0·895592	0·895606	0·895621	0·895635	0·895650	0·895664	0·895679	15
255	·895693	·895708	·895722	·895737	·895751	·895766	·895780	·895794	·895808	·895822	14
256	·895836	·895851	·895865	·895879	·895893	·895907	·895921	·895935	·895949	·895963	14
257	·895977	·895991	·896005	·896019	·896033	·896047	·896061	·896075	·896089	·896103	14
258	·896116	·896130	·896144	·896158	·896172	·896186	·896199	·896213	·896226	·896240	14
259	·896253	·896267	·896280	·896294	·896307	·896321	·896334	·896348	·896361	·896375	14
260	·896388	·896402	·896415	·896429	·896442	·896456	·896469	·896482	·896495	·896508	13
261	·896521	·896535	·896548	·896561	·896574	·896587	·896600	·896613	·896626	·896639	13
262	·896652	·896665	·896678	·896691	·896704	·896717	·896730	·896743	·896756	·896769	13
263	·896781	·896794	·896807	·896820	·896833	·896846	·896859	·896872	·896884	·896897	13
264	·896909	·896922	·896935	·896948	·896960	·896973	·896985	·896998	·897010	·897023	13
265	·897035	·897048	·897060	·897073	·897085	·897098	·897110	·897123	·897135	·897147	12
266	·897159	·897172	·897184	·897197	·897209	·897221	·897233	·897245	·897257	·897269	12
267	·897281	·897293	·897305	·897317	·897329	·897341	·897353	·897365	·897377	·897389	12
268	·897401	·897413	·897425	·897437	·897449	·897461	·897473	·897485	·897497	·897509	12
269	·897520	·897532	·897544	·897556	·897568	·897580	·897591	·897603	·897614	·897626	12
270	·897637	·897649	·897660	·897672	·897683	·897695	·897706	·897718	·897729	·897741	12
271	·897752	·897764	·897775	·897787	·897798	·897810	·897821	·897833	·897844	·897855	11
272	·897866	·897878	·897889	·897901	·897912	·897923	·897934	·897945	·897956	·897967	11
273	·897978	·897990	·898001	·898012	·898023	·898034	·898045	·898056	·898067	·898078	11
274	·898089	·898100	·898111	·898122	·898133	·898144	·898155	·898166	·898177	·898188	11
275	·898198	·898209	·898220	·898231	·898242	·898253	·898264	·898275	·898285	·898296	11
276	·898306	·898317	·898328	·898339	·898349	·898360	·898370	·898381	·898391	·898402	11
277	·898412	·898423	·898433	·898444	·898454	·898465	·898475	·898486	·898496	·898506	10
278	·898516	·898527	·898537	·898548	·898558	·898569	·898579	·898589	·898599	·898609	10
279	·898619	·898630	·898640	·898650	·898660	·898670	·898680	·898690	·898700	·898710	10
280	·898720	·898730	·898740	·898750	·898760	·898770	·898780	·898790	·898800	·898810	10
281	·898819										

Digitized by Google

Table VII.

Altitude or $A(v)$ Table.

v.	0	1	2	3	4	5	6	7	8	9	Δ
50	0·00	0·11	0·33	0·68	1·16	1·76	2·49	3·34	4·32	5·43	0·67
51	6·66	8·01	9·50	11·13	12·89	14·78	16·79	18·91	21·13	23·45	1·92
52	25·87	28·41	31·08	33·88	36·80	39·83	42·96	46·19	49·52	52·95	3·06
53	56·47	60·01	63·83	67·66	71·60	75·64	79·78	83·03	88·38	92·83	4·09
54	97·39	102·03	106·76	111·57	116·47	121·46	126·53	131·68	136·93	142·26	5·03
55	147·67	153·17	158·76	164·43	170·19	176·04	181·97	187·98	194·09	200·28	5·88
56	206·49	212·83	219·24	225·72	232·27	238·89	245·58	252·35	259·19	266·09	6·66
57	273·07	280·12	287·24	294·43	301·69	309·02	316·42	323·90	331·45	339·06	7·37
58	346·75	354·50	362·32	370·20	378·13	386·13	394·19	402·32	410·50	418·74	8·03
59	427·05	435·42	443·85	452·34	460·89	469·50	478·18	486·91	495·71	504·57	8·64
60	513·49	522·47	531·48	540·56	549·69	558·87	568·10	577·39	586·72	596·10	9·21
61	605·56	615·03	624·56	634·15	643·78	653·47	663·21	673·00	682·84	692·73	9·71
62	702·69	712·68	722·72	732·80	742·92	753·08	763·28	773·52	783·81	794·14	10·18
63	804·51	814·92	825·37	835·86	846·40	856·97	867·59	878·25	888·95	899·69	10·60
64	910·48	921·31	932·17	942·06	953·99	964·95	975·95	986·98	998·04	*009·14	10·98
65	1 020·28	031·45	042·65	053·89	065·16	076·47	087·81	099·19	110·60	122·04	11·32
66	133·52	145·02	156·55	168·11	179·70	191·32	202·96	214·63	226·33	238·06	11·63
67	249·82	261·61	273·42	285·26	297·13	309·03	320·95	332·91	344·89	356·90	11·91
68	1 368·94	381·00	393·09	405·20	417·34	429·50	441·69	453·90	466·13	478·39	12·17
69	490·67	502·98	515·31	527·67	540·05	552·45	564·88	577·33	589·81	602·31	12·42
70	614·84	627·39	639·95	652·53	665·14	677·76	690·40	703·06	715·73	728·42	12·63
71	1 741·14	753·87	766·62	779·39	792·17	804·97	817·80	830·64	843·50	856·38	12·81
72	869·27	882·16	895·07	907·99	920·92	933·86	946·82	959·72	972·77	985·76	12·95
73	998·77	*011·79	*024·82	*037·86	*050·91	*063·98	*077·06	*090·15	*103·26	*116·37	13·07
74	2 129·50	142·64	155·79	168·94	182·11	195·29	208·48	221·67	234·88	248·10	13·18
75	261·33	274·56	287·81	301·07	314·34	327·61	340·90	354·20	367·51	380·82	13·28
76	394·15	407·48	420·82	434·15	447·49	460·82	474·16	487·50	500·84	514·18	13·34
77	2 527·52	540·86	554·20	567·54	580·89	594·24	607·59	620·93	634·28	647·63	13·35
78	660·98	674·33	687·68	701·03	714·38	727·73	741·07	754·42	767·76	781·10	13·35
79	794·44	807·79	821·13	834·47	847·81	861·15	874·49	887·83	901·16	914·49	13·34
80	2 927·82	941·16	954·49	967·82	981·15	994·47	*007·79	*021·11	*034·42	*047·73	13·32
81	3 061·03	074·33	087·62	100·91	114·19	127·47	140·75	154·02	167·29	180·56	13·28
82	193·83	207·08	220·32	233·55	246·77	259·97	273·16	286·34	299·51	312·66	13·20
83	3 325·80	338·93	352·04	365·14	378·24	391·32	404·38	417·43	430·48	443·51	13·07
84	456·52	469·51	482·49	495·45	508·40	521·33	534·25	547·15	560·04	572·91	12·93
85	585·77	598·61	611·44	624·25	637·05	649·83	662·60	675·35	688·09	700·81	12·78
86	3 713·52	726·21	738·89	751·55	764·19	776·82	789·43	802·03	814·61	827·18	12·62
87	839·73	852·26	864·78	877·29	889·78	902·25	914·71	927·15	939·57	951·98	12·47
88	964·38	976·76	989·12	*001·47	*013·80	*026·11	*038·41	*050·69	*062·96	*075·21	12·31
89	4 087·45	099·67	111·87	124·06	136·23	148·38	160·52	172·64	184·75	196·84	12·15
90	208·92	220·98	233·02	245·05	257·06	269·05	281·03	292·99	304·94	316·87	11·99
91	328·79	340·69	352·57	364·44	376·29	388·12	399·94	411·74	423·53	435·30	11·83

Digitized by Google

TABLE VII—*continued.*

ALTITUDE OR $A(v)$ TABLE.

v.	0	1	2	3	4	5	6	7	8	9	Δ
92	4 447·05	458·79	470·51	482·21	493·90	505·57	517·23	528·87	540·50	552·11	11·67
93	563·70	575·28	586·84	598·38	609·91	621·42	632·92	644·40	655·86	667·31	11·50
94	678·74	690·16	701·56	712·94	724·31	735·66	746·99	758·31	769·62	780·91	11·34
95	4 792·18	803·44	814·68	825·90	837·11	848·30	859·48	870·64	881·79	892·92	11·19
96	904·03	915·13	926·21	937·28	948·33	959·36	970·38	981·38	992·37	*003·34	11·03
97	5 014·30	025·24	036·17	047·08	057·97	068·85	079·71	090·56	101·39	112·20	10·87
98	5 123·00	133·78	144·55	155·30	166·04	176·76	187·47	198·16	208·84	219·50	10·71
99	230·14	240·77	251·38	261·98	272·56	283·13	293·68	304·22	314·74	325·25	10·56
100	335·74	346·23	356·70	367·15	377·58	388·00	398·40	408·78	419·14	429·49	10·41
101	5 439·82	450·15	460·46	470·74	481·00	491·24	501·46	511·66	521·84	531·99	10·23
102	542·12	552·23	562·32	572·39	582·44	592·46	602·46	612·44	622·40	632·34	10·01
103	642·26	652·12	661·91	671·62	681·27	691·84	700·32	709·73	719·08	728·35	9·53
104	5 737·54	746·66	755·70	764·66	773·56	782·38	791·12	799·79	808·39	816·91	8·78
105	825·35	833·60	841·79	849·92	857·99	866·00	873·95	881·84	889·67	897·44	7·98
106	905·16	912·82	920·41	927·94	935·42	942·84	950·19	957·49	964·73	971·91	7·39
107	5 979·03	986·15	993·25	*000·31	*007·34	*014·34	*021·30	*028·24	*035·15	*042·02	6·98
108	6 048·86	055·67	062·45	069·20	075·91	082·59	089·25	095·87	102·46	109·02	6·67
109	115·55	122·07	128·57	135·05	141·51	147·95	154·37	160·77	167·15	173·51	6·43
110	6 179·84	186·15	192·44	198·71	204·96	211·19	217·40	223·59	229·75	235·89	6·22
111	242·01	248·13	254·24	260·34	266·42	272·49	278·55	284·60	290·63	296·61	6·07
112	302·66	308·65	314·63	320·60	326·55	332·49	338·42	344·33	350·23	356·12	5·93
113	6 361·99	367·86	373·73	379·59	385·44	391·28	397·11	402·93	408·74	414·55	5·84
114	420·35	426·14	431·92	437·69	443·45	449·20	454·94	460·67	466·39	472·11	5·75
115	477·82	483·52	489·21	494·89	500·56	506·22	511·87	517·52	523·16	528·79	5·66
116	6 534·41	540·02	545·62	551·21	556·80	562·38	567·95	573·51	579·06	584·60	5·57
117	590·14	595·67	601·19	606·70	612·20	617·69	623·17	628·65	634·12	639·58	5·49
118	645·03	650·47	655·91	661·34	666·76	672·17	677·57	682·96	688·35	693·73	5·41
119	6 699·10	704·46	709·81	715·16	720·50	725·83	731·15	736·46	741·77	747·07	5·33
120	752·36	757·64	762·91	768·18	773·44	778·69	783·93	789·17	794·40	799·62	5·25
121	804·83	810·03	815·23	820·42	825·60	830·77	835·94	841·10	846·25	851·39	5·17
122	6 856·52	861·65	866·77	871·88	876·98	882·08	887·17	892·25	897·32	902·39	5·09
123	907·45	912·51	917·56	922·60	927·63	932·66	937·68	942·69	947·69	952·69	5·02
124	957·68	962·66	967·64	972·61	977·57	982·52	987·47	992·41	997·34	*002·26	4·95
125	7 007·18	012·09	017·00	021·90	026·79	031·68	036·56	041·43	046·30	051·16	4·88
126	056·01	060·86	065·70	070·53	075·36	080·18	084·99	089·80	094·60	099·39	4·82
127	104·18	108·96	113·74	118·51	123·28	128·04	132·79	137·54	142·28	147·02	4·76
128	7 151·75	156·47	161·19	165·90	170·61	175·31	180·01	184·70	189·38	194·06	4·70
129	198·73	203·40	208·06	212·71	217·36	222·00	226·64	231·27	235·90	240·52	4·64
130	245·13	249·74	254·34	258·94	263·53	268·12	272·70	277·27	281·84	286·40	4·58
131	7 290·96	295·51	300·06	304·60	309·14	313·68	318·21	322·74	327·26	331·77	4·53
132	336·28	340·79	345·29	349·78	354·27	358·75	363·23	367·70	372·17	376·63	4·48
133	381·09	385·54	389·99	394·44	398·88	403·32	407·75	412·17	416·59	421·00	4·43

Digitized by Google

Table VII—*continued.*

Altitude or $A(v)$ Table.

v.	0	1	2	3	4	5	6	7	8	9	Δ
134	7 425·41	429·81	434·21	438·60	442·99	447·38	451·71	456·14	460·51	464·88	4·38
135	469·24	473·60	477·95	482·30	486·65	490·99	495·33	499·66	503·99	508·31	4·34
136	512·63	516·95	521·26	525·57	529·87	534·17	538·46	542·75	547·04	551·32	4·30
137	7 555·60	559·88	564·15	568·42	572·68	576·94	581·20	585·45	589·70	593·95	4·26
138	598·19	602·43	606·66	610·89	615·12	619·34	623·56	627·78	631·99	636·20	4·22
139	640·40	644·60	648·80	652·99	657·18	661·37	665·55	669·73	673·91	678·08	4·19
140	7 682·25	686·42	690·58	694·74	698·90	703·05	707·20	711·35	715·50	719·64	4·15
141	723·78	727·92	732·05	736·18	740·31	744·43	748·55	752·67	756·78	760·89	4·12
142	765·00	769·11	773·21	777·31	781·41	785·50	789·59	793·68	797·76	801·84	4·09
143	7 805·92	809·99	814·06	818·13	822·20	826·26	830·30	834·38	838·44	842·49	4·06
144	846·54	850·59	854·64	858·68	862·72	866·76	870·80	874·83	878·86	882·89	4·04
145	886·91	890·93	894·95	898·97	902·99	907·00	911·01	915·02	919·03	923·03	4·01
146	7 927·03	931·03	935·03	939·02	943·01	947·00	950·99	954·98	958·96	962·94	3·99
147	966·92	970·90	974·88	978·86	982·83	986·80	990·77	994·74	998·70	*002·66	3·97
148	8 006·62	010·58	014·54	018·49	022·44	026·39	030·33	034·27	038·21	042·15	3·95
149	8 046·09	050·02	053·93	057·88	061·81	065·74	069·66	073·58	077·50	081·42	3·93
150	085·34	089·26	093·17	097·08	100·99	104·90	108·81	112·72	116·62	120·52	3·91
151	124·42	128·32	132·22	136·12	140·02	143·92	147·81	151·70	155·59	159·48	3·90
152	8 163·37	167·26	171·15	175·04	178·92	182·80	186·68	190·56	194·44	198·32	3·88
153	202·20	206·08	209·96	213·83	217·70	221·57	225·44	229·31	233·18	237·05	3·87
154	240·92	244·78	248·64	252·50	256·36	260·22	264·08	267·94	271·79	275·64	3·86
155	8 279·49	283·34	287·19	291·04	294·88	298·72	302·56	306·40	310·24	314·08	3·84
156	317·92	321·76	325·59	329·42	333·25	337·08	340·91	344·74	348·57	352·40	3·83
157	356·22	360·04	363·86	367·68	371·50	375·32	379·14	382·96	386·77	390·58	3·82
158	8 394·39	398·20	402·01	405·82	409·63	413·43	417·23	421·03	424·83	428·63	3·80
159	432·43	436·23	440·03	443·83	447·63	451·42	455·21	459·00	462·79	466·58	3·79
160	470·36	474·14	477·92	481·70	485·48	489·26	493·04	496·82	500·59	504·36	3·78
161	8 508·13	511·90	515·67	519·44	523·20	526·96	530·72	534·48	538·24	542·00	3·76
162	545·76	549·52	553·27	557·02	560·77	564·52	568·27	572·02	575·76	579·50	3·75
163	583·24	586·98	590·72	594·46	598·20	601·94	605·67	609·40	613·13	616·86	3·74
164	8 620·59	624·32	628·05	631·77	635·49	639·21	642·93	646·65	650·37	654·09	3·72
165	657·80	661·51	665·22	668·93	672·64	676·35	680·06	683·77	687·48	691·19	3·71
166	694·89	698·59	702·29	705·99	709·69	713·39	717·09	720·78	724·47	728·16	3·70
167	8 731·85	735·54	739·23	742·91	746·59	750·27	753·95	757·63	761·31	764·98	3·68
168	768·65	772·32	775·99	779·66	783·33	787·00	790·66	794·32	797·98	801·64	3·67
169	805·30	808·96	812·61	816·26	819·91	823·56	827·21	830·86	834·51	838·16	3·65
170	8 841·80	845·44	849·08	852·72	856·36	860·00	863·63	867·26	870·89	874·52	3·64
171	878·15	881·78	885·41	889·03	892·65	896·27	899·89	903·51	907·13	910·75	3·62
172	914·36	917·97	921·58	925·19	928·80	932·41	936·02	939·63	943·23	946·83	3·61
173	8 950·43	954·03	957·63	961·23	964·83	968·42	972·01	975·60	979·19	982·78	3·60
174	986·37	989·96	993·55	997·13	*000·71	*004·29	*007·87	*011·45	*015·03	*018·61	3·58
175	9 022·18	025·75	029·32	032·89	036·46	040·03	043·59	047·15	050·71	054·27	3·57

Digitized by Google

TABLE VII—*continued.*

ALTITUDE OR $A(v)$ TABLE.

$v.$	0	1	2	3	4	5	6	7	8	9	Δ
176	9 057·83	061·39	064·95	068·51	072·06	075·61	079·16	082·71	086·26	089·81	3·55
177	093·36	096·90	100·44	103·98	107·52	111·06	114·60	118·14	121·67	125·20	3·54
178	128·73	132·26	135·79	139·32	142·85	146·38	149·91	153·43	156·95	160·47	3·53
179	9 163·99	167·51	171·03	174·54	178·05	181·56	185·07	188·58	192·09	195·60	3·51
180	199·10	202·60	206·10	209·60	213·10	216·60	220·10	223·59	227·08	230·57	3·50
181	234·06	237·55	241·04	244·53	248·02	251·51	255·00	258·48	261·96	265·44	3·49
182	9 268·92	272·40	275·88	279·36	282·83	286·30	289·77	293·24	296·71	300·18	3·47
183	303·65	307·11	310·57	314·03	317·49	320·95	324·41	327·87	331·33	334·79	3·46
184	338·24	341·69	345·14	348·59	352·04	355·49	358·94	362·38	365·82	369·26	3·45
185	9 372·70	376·14	379·58	383·02	386·45	389·88	393·31	396·74	400·17	403·60	3·43
186	407·03	410·46	413·89	417·32	420·75	424·18	427·60	431·02	434·44	437·86	3·42
187	441·28	444·70	448·12	451·54	454·96	458·37	461·78	465·19	468·60	472·01	3·41
188	9 475·42	478·83	482·24	485·64	489·04	492·44	495·84	499·24	502·64	506·04	3·40
189	509·44	512·84	516·23	519·62	523·01	526·40	529·79	533·18	536·57	539·96	3·39
190	543·35	546·73	550·11	553·49	556·87	560·25	563·63	567·01	570·39	573·77	3·38
191	9 577·15	580·53	583·90	587·27	590·64	594·01	597·38	600·75	604·12	607·48	3·37
192	610·84	614·20	617·56	620·92	624·28	627·64	630·99	634·34	637·69	641·04	3·36
193	644·39	647·74	651·08	654·42	657·76	661·10	664·44	667·78	671·12	674·45	3·34
194	9 677·79	681·12	684·45	687·78	691·11	694·44	697·77	701·09	704·41	707·73	3·33
195	711·05	714·37	717·69	721·01	724·32	727·63	730·94	734·25	737·56	740·87	3·31
196	744·17	747·47	750·77	754·07	757·37	760·67	763·96	767·25	770·54	773·83	3·29
197	9 777·11	780·39	783·63	786·95	790·22	793·49	796·76	800·03	803·30	806·56	3·27
198	809·82	813·08	816·34	819·59	822·84	826·09	829·34	832·58	835·82	839·06	3·25
199	842·30	845·54	848·77	852·00	855·23	858·46	861·68	864·90	868·12	871·34	3·23
200	9 874·56	877·77	880·98	884·19	887·40	890·61	893·81	897·01	900·21	903·41	3·21
201	906·61	909·80	912·99	916·18	919·37	922·55	925·73	928·91	932·09	935·27	3·18
202	938·44	941·61	944·78	947·94	951·10	954·26	957·41	960·56	963·71	966·86	3·16
203	9 970·01	973·15	976·29	979·43	982·57	985·70	988·85	991·96	995·09	998·21	3·13
204	10 001·33	004·45	007·57	010·68	013·79	016·90	020·01	023·11	026·21	029·31	3·11
205	032·40	035·49	038·58	041·67	044·76	047·84	050·92	054·00	057·08	060·15	3·08
206	10 063·22	066·29	069·36	072·42	075·48	078·54	081·60	084·65	087·70	090·75	3·06
207	093·80	096·84	099·88	102·92	105·96	109·00	112·03	115·06	118·09	121·12	3·03
208	124·14	127·16	130·18	133·20	136·21	139·22	142·23	145·24	148·24	151·24	3·01
209	10 154·24	157·23	160·22	163·21	166·20	169·18	172·16	175·14	178·12	181·09	2·98
210	184·06	187·03	190·00	192·96	195·92	198·88	201·84	204·80	207·75	210·70	2·96
211	213·65	216·59	219·53	222·47	225·41	228·34	231·27	234·20	237·13	240·05	2·93
212	10 242·97	245·89	248·88	251·73	254·64	257·55	260·46	263·37	266·27	269·17	2·91
213	272·07	274·97	277·87	280·76	283·65	286·54	289·43	292·31	295·19	298·07	2·89
214	300·95	303·83	306·70	309·57	312·44	315·31	318·17	321·03	323·89	326·75	2·87
215	10 329·61	334·26	335·31	338·16	341·01	343·86	346·70	349·54	352·38	355·22	2·84
216	358·05	360·88	363·71	366·54	369·37	372·19	375·01	377·83	380·65	383·47	2·82
217	386·28	389·09	391·89	394·69	397·49	400·29	403·09	405·88	408·67	411·46	2·80

Digitized by Google

Table VII—*continued.*

Altitude or $A(v)$ Table.

$v.$	0	1	2	3	4	5	6	7	8	9	Δ
218	10 414·25	417·04	419·82	422·60	425·38	428·16	430·94	433·71	436·48	439·25	2·78
219	442·02	444·78	447·54	450·30	453·06	455·82	458·58	461·33	464·08	466·83	2·76
220	469·58	472·32	475·06	477·80	480·54	483·28	486·02	488·75	491·48	494·21	2·74
221	10 496·94	499·67	502·39	505·11	507·83	510·55	513·26	515·97	518·68	521·39	2·72
222	524·10	526·80	529·50	532·20	534·90	537·59	540·28	542·97	545·66	548·34	2·69
223	551·02	553·70	556·38	559·06	561·74	564·41	567·08	569·75	572·42	575·09	2·67
224	10 577·75	580·41	583·07	585·73	588·39	591·04	593·69	596·34	598·99	601·64	2·65
225	604·28	606·92	609·56	612·20	614·83	617·46	620·09	622·72	625·35	627·97	2·63
226	630·59	633·21	635·83	638·45	641·06	643·67	646·28	648·89	651·50	654·11	2·61
227	10 656·71	659·31	661·91	664·51	667·11	669·71	672·31	674·91	677·50	680·09	2·60
228	682·68	685·27	687·86	690·45	693·03	695·61	698·19	700·77	703·35	705·93	2·58
229	708·51	711·09	713·67	716·25	718·83	721·41	723·99	726·57	729·14	731·71	2·58
230	10 734·28	736·85	739·42	741·99	744·56	747·13	749·70	752·27	754·84	757·41	2·57
231	759·98	762·55	765·12	767·69	770·26	772·83	775·40	777·97	780·55	783·12	2·57
232	785·70	788·27	790·85	793·42	796·00	798·57	801·15	803·72	806·30	808·87	2·58
233	10 811·45	814·02	816·60	819·17	821·75	824·32	826·90	829·48	832·06	834·64	2·58
234	837·22	839·80	842·38	844·96	847·54	850·12	852·70	855·28	857·86	860·44	2·58
235	863·02	865·60	868·18	870·76	873·34	875·92	878·51	881·09	883·68	886·26	2·58
236	10 888·85	891·13	894·02	896·60	899·19	901·77	904·36	906·95	909·54	912·13	2·59
237	914·72	917·31	919·90	922·49	925·08	927·67	930·26	932·85	935·44	938·03	2·59
238	940·63	943·22	945·81	948·40	950·99	953·58	956·18	958·78	961·38	963·98	2·60
239	10 966·58	969·18	971·78	974·38	976·98	979·58	982·18	984·78	987·38	989·98	2·60
240	992·58	995·18	997·78	*000·38	*002·98	*005·58	*008·19	*010·80	*013·41	*016·02	2·61
241	11 018·63	021·24	023·85	026·46	029·07	031·68	034·29	036·90	039·51	042·12	2·61
242	11 044·73	047·34	049·95	052·56	055·17	057·79	060·41	063·03	065·65	068·27	2·62
243	070·89	073·51	076·13	078·75	081·37	083·99	086·61	089·23	091·86	094·48	2·62
244	097·11	099·73	102·35	104·98	107·60	110·23	112·85	115·48	118·10	120·73	2·62
245	11 123·35	125·98	128·60	131·23	133·85	136·48	139·10	141·73	144·35	146·98	2·63
246	149·61	152·23	154·86	157·49	160·12	162·73	165·38	168·01	170·64	173·27	2·63
247	175·90	178·53	181·16	183·79	186·42	189·05	191·68	194·31	196·94	199·57	2·63
248	11 202·21	204·84	207·47	210·10	212·74	215·37	218·01	220·64	223·28	225·91	2·63
249	228·55	231·18	233·82	236·45	239·09	241·72	244·36	246·99	249·62	252·25	2·63
250	254·88	257·52	260·15	262·78	265·41	268·04	270·68	273·31	275·94	278·57	2·63
251	11 281·10	283·84	286·47	289·10	291·73	294·36	296·99	299·62	302·25	304·88	2·63
252	307·51	310·14	312·77	315·39	318·02	320·64	323·27	325·89	328·52	331·14	2·63
253	333·76	336·38	339·00	341·62	344·24	346·86	349·48	352·10	354·72	357·34	2·62
254	11 359·95	362·56	365·17	367·78	370·39	373·00	375·61	378·22	380·83	383·44	2·61
255	386·04	388·64	391·24	393·84	396·44	399·04	401·64	404·24	406·84	409·44	2·60
256	412·03	414·62	417·21	419·80	422·39	424·97	427·55	430·13	432·71	435·29	2·58
257	11 437·87	440·45	443·02	445·59	448·16	450·73	453·30	455·87	458·44	461·00	2·57
258	463·56	466·12	468·68	471·24	473·80	476·36	478·91	481·46	484·01	486·56	2·56
259	489·11	491·65	494·19	496·73	499·27	501·81	504·34	506·87	509·40	511·93	2·54

Digitized by Google

TABLE VII—*continued*,

ALTITUDE OR $A(v)$ TABLE.

v.	0	1	2	3	4	5	6	7	8	9	Δ
260	11 514·46	516·19	519·52	522·04	524·56	527·08	529·60	532·12	534·64	537·16	2·52
261	539·67	542·18	544·69	547·20	549·70	552·20	554·70	557·20	559·70	562·20	2·50
262	564·69	567·18	569·67	572·16	574·65	577·13	579·61	582·09	584·57	587·05	2·48
263	11 589·53	592·01	594·49	596·96	599·43	601·90	604·37	606·84	609·31	611·77	2·47
264	614·23	616·69	619·15	621·61	624·06	626·51	628·96	631·41	633·86	636·31	2·45
265	638·75	641·19	643·63	646·07	648·51	650·95	653·39	655·83	658·27	660·70	2·44
266	11 663·13	665·66	667·99	670·41	672·83	675·25	677·67	680·09	682·51	684·92	2·42
267	687·33	689·74	692·15	694·56	696·96	699·36	701·76	704·16	706·56	708·96	2·40
268	711·36	713·16	716·15	718·54	720·93	723·32	725·71	728·10	730·49	732·87	2·39
269	11 735·25	737·63	740·01	742·39	744·76	747·13	749·50	751·87	754·24	756·61	2·37
270	758·97	761·33	763·69	766·05	768·41	770·77	773·12	775·47	777·82	780·17	2·36
271	782·52	784·87	787·22	789·57	791·91	794·25	796·59	798·93	801·27	803·61	2·34
272	11 805·94	808·27	810·60	812·93	815·26	817·59	819·92	822·24	824·56	826·88	2·33
273	829·20	831·52	833·84	836·15	838·46	840·77	843·08	845·39	847·69	849·99	2·31
274	852·29	854·59	856·89	859·19	861·48	863·77	866·06	868·35	870·64	872·93	2·29
275	11 875·21	877·49	879·77	882·05	884·33	886·61	888·89	891·16	893·43	895·70	2·28
276	897·97	900·24	902·51	904·77	907·03	909·29	911·55	913·81	916·07	918·32	2·26
277	920·57	922·82	925·07	927·32	929·57	931·81	934·05	936·29	938·53	940·77	2·24
278	11 943·01	945·25	947·48	949·71	951·94	954·17	956·40	958·63	960·85	963·07	2·23
279	965·29	967·51	969·73	971·95	974·16	976·37	978·58	980·79	983·00	985·21	2·21
280	987·41	989·61	991·81	994·01	996·21	998·41	*000·61	*002·80	*004·99	*007·18	2·20
281	12 009·37										

Digitized by Google

Table VIII.

Table for $i(\theta) = \int \sec^3\theta\, d\theta = \frac{1}{2}\sec\theta\tan\theta + \frac{1}{2}\log(\sec\theta + \tan\theta)$, and for $\tan\theta$.

θ	$i(\theta)$	$\tan\theta$	θ	$i(\theta)$	$\tan\theta$	θ	$i(\theta)$	$\tan\theta$	θ	$i(\theta)$	$\tan\theta$	θ	$i(\theta)$	$\tan\theta$
0	·00000	·00000	15	·27112	·26795	30	·60799	·57735	45	1·14779	1·00000	60	2·39053	1·73205
1	·01746	·01746	16	·29063	·28675	31	·63527	·60086	46	1·19849	1·03553	61	2·53670	1·80405
2	·03493	·03492	17	·31043	·30573	32	·66343	·62487	47	1·25201	1·07237	62	2·69777	1·88073
3	·05243	·05241	18	·33055	·32492	33	·69253	·64941	48	1·30863	1·11061	63	2·87491	1·96261
4	·06998	·06993	19	·35101	·34433	34	·72263	·67451	49	1·36863	1·15037	64	3·07205	2·05030
5	·08760	·08749	20	·37185	·36397	35	·75382	·70021	50	1·43236	1·19175	65	3·29041	2·14451
6	·10530	·10510	21	·39309	·38386	36	·78617	·72654	51	1·50019	1·23490	66	3·53533	2·24604
7	·12309	·12278	22	·41477	·40403	37	·81977	·75355	52	1·57257	1·27994	67	3·81077	2·35585
8	·14100	·14054	23	·43690	·42447	38	·85473	·78129	53	1·64995	1·32704	68	4·12257	2·47509
9	·15904	·15838	24	·45953	·44523	39	·89114	·80978	54	1·73291	1·37638	69	4·47736	2·60509
10	·17724	·17633	25	·48269	·46631	40	·92914	·83910	55	1·82207	1·42815	70	4·88420	2·74748
11	·19560	·19438	26	·50643	·48773	41	·96884	·86929	56	1·91815	1·48256	71	5·35416	2·90421
12	·21415	·21256	27	·53078	·50953	42	1·01039	·90040	57	2·02199	1·53987	72	5·90112	3·07768
13	·23290	·23087	28	·55580	·53171	43	1·05395	·93252	58	2·13456	1·60033	73	6·54404	3·27085
14	·25189	·24933	29	·58151	·55431	44	1·09968	·96569	59	2·25697	1·66428	74	7·30713	3·48741
												75	8·21871	3·73205

Digitized by Google

Table IX.

Ballistic Table for Spherical Shot.

(Recalculated by Mr. Hadcock, R.A., from Bashforth's data, and extended to low velocities.)

For lower velocities this table is provisional, pending the results of further experiments.

v	ΔT	T	ΔS	S	ΔD	D
f/s.						
300	1·2232	0·0000	366·91	0·00	7·5191	0·0000
310	1·1505	1·2232	356·67	366·91	6·8454	7·5191
320	1·0824	2·3737	346·37	723·58	6·2387	14·3645
330	1·0217	3·4561	337·22	1069·95	5·7113	20·6032
340	0·9647	4·4778	328·01	1407·17	5·2335	26·3145
350	0·9137	5·4425	319·78	1735·18	4·8148	31·5480
360	0·8653	6·3562	311·51	2054·96	4·4333	36·3628
370	0·8218	7·2215	304·07	2366·47	4·0967	40·7961
380	0·7805	8·0433	296·60	2670·54	3·7884	44·8928
390	0·7432	8·8238	289·84	2967·14	3·5147	48·6812
400	0·7076	9·5670	283·05	3256·98	3·2629	52·1959
410	0·6753	10·2746	276·88	3540·03	3·0380	55·4588
420	0·6445	10·9499	270·69	3816·91	2·8303	58·4968
430	0·6151	11·5944	264·51	4087·60	2·6385	61·3271
440	0·5763	12·2095	253·59	4352·11	2·4159	63·9656
450	0·5508	12·7858	247·86	4605·70	2·2575	66·3815
460	0·5265	13·3366	242·20	4853·56	2·1111	68·6390
470	0·5035	13·8631	236·64	5095·76	1·9758	70·7501
480	0·4816	14·3666	231·18	5332·40	1·8506	72·7259
490	0·4609	14·8482	225·84	5563·58	1·7349	74·5765
500	0·4413	15·3091	220·63	5789·42	1·6277	76·3114
510	0·4227	15·7504	215·55	6010·05	1·5285	77·9391
520	0·4050	16·1731	210·61	6225·60	1·4366	79·4676
530	0·3883	16·5781	205·80	6436·21	1·3513	80·9042
540	0.3725	16·9664	201·14	6642·01	1·2722	82·2555
550	0·3575	17·3389	196·61	6843·15	1·1988	83·5277
560	0·3429	17·6964	192·01	7039·76	1·1293	84·7265
570	0·3291	18·0393	187·57	7231·77	1·0648	85·8558
580	0·3157	18·3684	183·11	7419·34	1·0039	86·9206
590	0 3028	18·6841	178·64	7602·45	0·9465	87·9245
600	0·2903	18·9869	174·19	7781·09	0·8925	88·8710
610	0·2786	19·2772	169·95	7955·28	0·8424	89·7635
620	0·2673	19·5558	165·75	8125·23	0·7953	90·6059
630	0·2567	19·8231	161·74	8290·98	0·7516	91·4012
640	0·2467	20·0798	157·92	8452·72	0·7111	92·1528
650	0·2371	20·3265	154·14	8610·64	0·6729	92·8639
660	0·2281	20·5636	150·53	8764·78	0·6374	93·5368
670	0·2195	20·7917	147·09	8915·31	0·6044	94·1742
680	0·2115	21·0112	143·80	9062·40	0·5736	94·7786
690	0·2038	21·2227	140·65	9206·20	0·5449	95·3522
700	0·1966	21·4265	137·63	9346·85	0·5180	95·8971
710	0·1898	21·6231	134·73	9484·48	0·4930	96·4151
720	0·1832	21·8129	131·88	9619·21	0·4692	96·9081
730	0·1770	21·9961	129·22	9751·09	0·4472	97·3773
740	0·1711	22·1731	126·59	9880·31	0·4264	97·8245
750	0·1653	22·3442	123·99	10006·90	0·4066	98·2509
760	0·1600	22·5095	121·57	10130·89	0·3882	98·6575
770	0·1547	22·6695	119·12	10252·46	0·3706	99·0457
780	0·1496	22·8242	116·72	10371·58	0·3539	99·4163
790	0·1447	22·9738	114·36	10488·30	0·3378	99·7702
800	0·1399	23·1185	111·89	10602·60	0·3225	100·1080
810	0·1352	23·2584	109·50	10714·49	0·3078	100·4305
820	0·1306	24·3936	107·07	10823·99	0·2937	100·7383
830	0·1201	23·5242	104·68	10931·06	0·2803	101·0320

Digitized by Google

TABLE IX—*continued.*

Ballistic Table for Spherical Shot.

v	ΔT	T	ΔS	S	ΔD	D
f/s.						
840	0·1218	23·6503	102·33	11035·74	0·2675	101·3123
850	0·1177	23·7721	100·01	11138·07	0·2553	101·5798
860	0·1137	23·8898	97·76	11238·08	0·2438	101·8351
870	0·1098	24·0035	95·53	11335·84	0·2328	102·0789
880	0·1062	24·1133	93·44	11431·37	0·2225	102·3117
890	0·1026	24·2195	91·35	11524·81	0·2127	102·5342
900	0·0993	24·3221	89·33	11616·16	0·2034	102·7469
910	0·0959	24·4214	87·32	11705·49	0·1945	102·9503
920	0·0928	24·5173	85·37	11792·81	0·1860	103·1448
930	0·0898	24·6101	83·48	11878·18	0·1780	103·3308
940	0·0869	24·6999	81·65	11961·66	0·1704	103·5088
950	0·0840	24·7868	79·83	12043·31	0·1631	103·6792
960	0·0813	24·8708	78·01	12123·14	0·1561	103·8423
970	0·0785	24·9521	76·19	12201·15	0·1493	103·9984
980	0·0759	25·0306	74·43	12277·34	0·1429	104·1477
990	0·0734	25·1065	72·67	12351·77	0·1368	104·2906
1000	0·0709	25·1799	70·87	12424·44	0·1307	104·4274
1010	0·0684	25·2508	69·08	12495·31	0·1249	104·5581
1020	0·0660	25·3192	67·31	12564·39	0·1193	104·6830
1030	0·0636	25·3852	65·55	12631·70	0·1140	104·8023
1040	0·0614	25·4488	63·81	12697·25	0·1088	104·9163
1050	0·0591	25·5102	62·08	12761·06	0·1039	105·0251
1060	0·0570	25·5693	60·42	12823·14	0·0992	105·1290
1070	0·0550	25·6263	58·82	12883·56	0·0948	105·2282
1080	0·0531	25·6813	57·31	12942·38	0·0906	105·3230
1090	0·0513	25·7344	55·89	12999·69	0·0868	105·4136
1100	0·0496	25·7857	54·59	13055·58	0·0832	105·5004
1110	0·0481	25·8353	53·36	13110·17	0·0799	105·5836
1120	0·0466	25·8834	52·21	13163·53	0·0768	105·6635
1130	0·0453	25·9300	51·15	13215·74	0·0739	105·7403
1140	0·0440	25·9753	50·16	13266·89	0·0712	105·8142
1150	0·0428	26·0193	49·23	13317·05	0·0687	105·8854
1160	0·0417	26·0621	48·35	13366·28	0·0663	105·9541
1170	0·0406	26·1038	47·53	13414·63	0·0640	106·0204
1180	0·0396	26·1444	46·73	13462·16	0·0619	106·0844
1190	0·0386	26·1840	45·97	13508·89	0·0599	106·1463
1200	0·0377	26·2226	45·27	13554·86	0·0580	106·2062
1210	0·0369	26·2603	44·61	13600·13	0·0562	106·2642
1220	0·0361	26·2972	44·00	13644·74	0·0545	106·3204
1230	0·0353	26·3333	43·43	13688·74	0·0529	106·3749
1240	0·0346	26·3686	42·87	13732·17	0·0514	106·4278
1250	0·0339	26·4032	42·36	13775·04	0·0500	106·4792
1260	0·0332	26·4371	41·85	13817·40	0·0486	106·5292
1270	0·0326	26·4703	41·39	13859·25	0·0473	106·5778
1280	0·0320	26·5029	40·94	13900·64	0·0461	106·6251
1290	0·0314	26·5349	40·49	13941·58	0·0449	106·6712
1300	0·0308	26·5663	40·04	13982·07	0·0437	106·7161
1310	0·0302	26·5971	39·59	14022·11	0·0425	106·7598
1320	0·0297	26·6273	39·18	14061·70	0·0415	106·8023
1330	0·0291	26·6570	38·75	14100·88	0·0404	106·8438
1340	0·0286	26·6861	38·33	14139·63	0·0394	106·8842
1350	0·0281	26·7147	37·92	14177·96	0·0384	106·9236
1360	0·0276	26·7428	37·52	14215·88	0·0374	106·9620
1370	0·0271	26·7704	37·15	14253·40	0·0365	106·9994
1380	0·0267	26·7975	36·80	14290·55	0·0356	107·0359
1390	0·0262	26·8242	36·45	14327·35	0·0348	107·0715
1400	0·0258	26·8504	36·11	14363·80	0·0340	107·1063
1410	0·0254	26·8762	35·77	14399·91	0·0332	107·1403
1420	0·0250	26·9016	35·48	14435·68	0·0324	107·1735
1430	0·0246	26·9266	35·16	14471·16	0·0317	107·2059

Digitized by Google

TABLE IX—*continued.*

Ballistic Table for Spherical Shot.

v	ΔT	T	ΔS	S.	ΔD	D
f/s.						
1440	0·0242	26·9512	34·85	14506·32	0·0310	107·2376
1450	0·0238	26·9754	34·54	14541·17	0·0303	107·2686
1460	0·0235	26·9992	34·24	14575·71	0·0296	107·2989
1470	0·0231	27·0227	33·98	14609·95	0·0290	107·3285
1480	0·0228	27·0458	33·69	14643·93	0·0284	107·3575
1490	0·0224	27·0686	33·41	14677·62	0·0278	107·3859
1500	0·0221	27·0910	33·14	14711·03	0·0272	107·4137
1510	0·0218	27·1131	32·85	14744·17	0·0266	107·4409
1520	0·0214	27·1349	32·59	14777·02	0·0260	107·4675
1530	0·0211	27·1563	32·34	14809·61	0·0255	107·4935
1540	0·0208	27·1774	32·06	14841·95	0·0249	107·5190
1550	0·0205	27·1982	31·82	14874·01	0·0244	107·5439
1560	0·0202	27·2187	31·58	14905·83	0·0239	107·5683
1570	0·0200	27·2389	31·33	14937·41	0·0234	107·5922
1580	0·0197	27·2589	31·10	14968·74	0·0230	107·6156
1590	0·0194	27·2786	30·86	14999·84	0·0225	107·6386
1600	0·0191	27·2980	30·64	15030·70	0·0221	107·6611
1610	0·0189	27·3171	30·42	15061·34	0·0216	107·6832
1620	0·0186	27·3360	30·19	15091·76	0·0212	107·7048
1630	0·0184	27·3546	29·99	15121·95	0·0208	107·7260
1640	0·0182	27·3730	29·79	15151·94	0·0204	107·7468
1650	0·0179	27·3912	29·60	15181·73	0·0201	107·7672
1660	0·0177	27·4091	29·38	15211·33	0·0197	107·7873
1670	0·0175	27·4268	29·20	15240·71	0·0193	107·8070
1680	0·0173	27·4443	29·02	15269·91	0·0190	107·8263
1690	0·0171	27·4616	28·84	15298·93	0·0186	107·8453
1700	0·0168	27·4787	28·64	15327·77	0·0183	107·8639
1710	0·0167	27·4955	28·47	15356·41	0·0180	107·8822
1720	0·0165	27·5122	28·31	15384·88	0·0176	107·9002
1730	0·0163	27·5287	28·13	15413·19	0·0173	107·9178
1740	0·0161	27·5450	27·97	15441·32	0·0170	107·9351
1750	0·0159	27·5611	27·81	15469·29	0·0168	107·9521
1760	0·0157	27·5770	27·64	15497·10	0·0165	107·9689
1770	0·0155	27·5927	27·49	15524·74	0·0162	107·9854
1780	0·0154	27·6082	27·33	15552·23	0·0159	108·0016
1790	0·0152	27·6236	27·16	15579·56	0·0156	108·0175
1800	0·0150	27·6388	27·03	15606·72	0·0154	108·0331
1810	0·0148	27·6538	26·87	15633·75	0·0151	108·0485
1820	0·0147	27·6686	26·72	15660·62	0·0149	108·0636
1830	0·0145	27·6833	26·54	15687·34	0·0146	108·0785
1840	0·0143	27·6978	26·40	15713·88	0·0144	108·0931
1850	0·0142	27·7121	26·25	15740·28	0·0141	108·1075
1860	0·0140	27·7263	26·09	15766·53	0·0139	108·1216
1870	0·0139	27·7403	25·93	15792·62	0·0137	108·1355
1880	0·0137	27·7542	25·79	15818·55	0·0135	108·1492
1890	0·0136	27·7679	25·64	15844·34	0·0132	108·1627
1900	0·0134	27·7815	25·48	15869·98	0·0130	108·1759

Digitized by Google

Digitized by Google

Distance yds.	100	200	300	2200	2300	2400	2500	2600	2700	2800	2900	3000	3100
V f.s.													
550	0325	0658	099										
560	0313	0633	096										
570	0302	0611	092										
580	0291	0589	089										
590	0281	0569	086										
600	0271	0549	083										
610	0262	0531	080										
620	0253	0513	078										
630	0245	0496	075										
640	0237	0480	073										
650	0229	0465	070										
660	0222	0450	068										
670	0215	0436	066										
680	0208	0423	064										
690	0202	0410	062										
700	0196	0398	060										
710	0192	0389	059										
720	0188	0380	057										
730	0184	0371	056										
740	0179	0363	055										
750	0175	0354	053										
760	0171	0346	052										
770	0167	0338	051										
780	0163	0330	050										
790	0159	0322	048										
800	0155	0314	047	4403	4666	4935	5211						
810	0151	0306	046	4299	4554	4815	5080						
820	0147	0299	045	4199	4446	4699	4956	5219					
830	0144	0291	044	4103	4343	4588	4838	5093					
840	0141	0284	043	4010	4244	4483	4727	4975	5228				
850	0138	0278	042	3921	4150	4384	4622	4865	5118				
860	0134	0271	041	3835	4060	4290	4523	4761	5014	5273			
870	0131	0265	040	3753	3973	4200	4429	4662	4915	5169			
880	0127	0258	039	3674	3891	4113	4339	4570	4818	5067	5326		
890	0124	0252	038	3596	3811	4028	4253	4484	4724	4968	5220		
900	0121	0246	037	3522	3732	3949	4171	4399	4633	4872	5118	5369	
910	0118	0240	036	3454	3661	3874	4092	4316	4545	4779	5018	5263	
920	0116	0235	035	3388	3592	3802	4016	4235	4459	4688	4922	5161	5406
930	0113	0230	034	3324	3525	3731	3942	4157	4376	4600	4829	5062	5301

a

Digitized by Google

THE NEW YORK
PUBLIC LIBRARY

ASTOR, LENOX AND
TILDEN FOUNDATIONS.

Digitized by Google

Table XI.

Tenuity correction τ for Temperature and Pressure of Atmosphere two-thirds saturated with Moisture.

(From the Rev. F. Bashforth's paper, *Proc. R.A.I.*, Vol. XIII, No. 10.)

F.	26in.	27 in.	28 in.	29 in.	30 in.	31 in.	Δ +	F.	26in.	27in.	28 in.	29 in.	30 in.	31 in.	Δ +
°								°							
0	·983	1·021	1·059	1·097	1·134	1·172	38	50	·884	·919	·953	·987	1·021	1·055	34
1	·981	1·019	1·056	1·094	1·132	1·170	38	51	883	·917	·951	·985	1·019	1·053	34
2	·979	1·017	1·054	1·092	1·130	1·167	38	52	·881	·915	·949	·983	1·017	1·051	34
3	·977	1·015	1·052	1·090	1·127	1·165	38	53	·879	·913	·947	·981	1·015	1·048	34
4	·975	1·012	1·050	1·087	1·125	1·162	38	54	·877	·911	·945	·978	1·012	1·046	34
5	·973	1·010	1·047	1·085	1·122	1·160	37	55	·875	·909	·943	·976	1·010	1·044	34
6	·971	1·008	1·045	1·083	1·120	1·157	37	56	·874	·907	·941	·974	1·008	1·042	34
7	·969	1·006	1·043	1·080	1·118	1·155	37	57	·872	·905	·939	·972	1·006	1·039	34
8	·966	1·004	1·041	1·078	1·115	1·152	37	58	·870	·904	·937	·970	1·004	1·037	34
9	·964	1·001	1·039	1·076	1·113	1·150	37	59	·868	·902	·935	·968	1·002	1·035	33
10	·962	·999	1·036	1·073	1·110	1·147	37	60	·866	·900	·933	·966	1·000	1·033	33
11	·960	·997	1·034	1·071	1·108	1·145	37	61	·865	·898	·931	·964	·998	1·031	33
12	·958	·995	1·032	1·069	1·105	1·142	37	62	·863	·896	·929	·962	·996	1·029	33
13	·956	·993	1·029	1·066	1·103	1·140	37	63	·861	·894	·927	·960	·993	1·027	33
14	·954	·991	1·027	1·064	1·101	1·137	37	64	·859	·892	·925	·958	·991	1·024	33
15	·952	·989	1·025	1·062	1·098	1·135	37	65	·857	·890	·923	·956	·989	1·022	33
16	·950	·986	1·023	1·060	1·096	1·133	37	66	·856	·889	·921	·954	·987	1·020	33
17	·948	·984	1·021	1·057	1·094	1·130	37	67	·854	·887	·919	·952	·985	1·018	33
18	·946	·982	1·019	1·055	1·091	1·128	36	68	·852	·885	·918	·950	·983	1·016	33
19	·944	·980	1·017	1·053	1·089	1·125	36	69	·850	·883	·916	·949	·981	1·014	33
20	·942	·978	1·014	1·051	1·087	1·123	36	70	·849	·881	·914	·946	·979	1·012	33
21	·940	·976	1·012	1·048	1·084	1·121	36	71	·847	·879	·912	·944	·977	1·010	33
22	·938	·974	1·010	1·046	1·082	1·118	36	72	·845	·878	·910	·943	·975	1·008	33
23	·936	·972	1·008	1·044	1·080	1·116	36	73	·843	·876	·908	·941	·973	1·006	32
24	·934	·970	1·006	1·042	1·078	1·114	36	74	·842	·874	·906	·939	·971	1·004	32
25	·932	·968	1·004	1·039	1·075	1·111	36	75	·840	·872	904	·937	·969	1·001	32
26	·930	·966	1·001	1·037	1·073	1·109	36	76	·838	·870	·902	·935	·967	·999	32
27	·928	·964	·999	1·035	1·071	1·106	36	77	·836	·868	·901	·933	·965	·997	32
28	·926	·962	·997	1·033	1·069	1·104	36	78	·834	·867	·899	·931	·963	·995	32
29	·924	·960	·995	1·031	1·066	1·102	36	79	833	·865	·897	·929	·961	·993	32
30	·922	·958	·993	1·028	1·064	1·099	36	80	·831	·863	·895	·927	·959	·991	32
31	·920	·956	·991	1·026	1·062	1·097	35	81	·829	·861	·893	·925	·957	·989	32
32	·918	·954	·989	1·024	1·059	1·095	35	82	·827	·859	·891	·923	·955	·987	32
33	·916	·952	·987	1·022	1·057	1·093	35	83	·826	·858	·889	·921	·953	·985	32
34	·914	·950	·985	1·020	1·055	1·090	35	84	·824	·856	·887	·919	·951	·983	32
35	·913	·948	·983	1·018	1·053	1·088	35	85	·822	·854	·885	·917	·949	·980	32
36	·911	·946	·981	1·016	1·051	1·086	35	86	·821	·852	·884	·915	·947	·978	32
37	·909	·944	·979	1·013	1·048	1·083	35	87	·819	·850	·882	·913	·945	·976	32
38	·907	·942	·977	1·011	1·046	1·081	35	88	·817	·848	·880	·911	·943	·974	31
39	·905	·940	·974	1·009	1·044	1·079	35	89	·815	·847	·878	·909	·941	·972	31
40	·903	·938	·973	1·007	1·042	1·077	35	90	·814	·845	·876	·908	·939	·970	31
41	·901	·936	·971	1·005	1·040	1·075	35	91	·812	·843	·874	·905	·937	·968	31
42	·899	·934	·968	1·003	1·038	1·072	35	92	·810	·841	·872	·903	·935	·966	31
43	·898	·932	·967	1·001	1·036	1·070	35	93	·808	·839	·870	·902	·933	·964	31
44	·896	·930	·964	0·999	1·033	1·068	34	94	·806	·837	·868	·900	·931	·962	31
45	·894	·928	·963	0·997	1·031	1·066	34	95	·805	·836	·867	·898	·929	·960	31
46	·892	·926	·960	0·995	1·029	1·063	34	96	·803	·834	·865	·896	·926	·957	31
47	·890	·924	·958	0·993	1·027	1·061	34	97	·801	·832	·863	·893	·924	·955	31
48	·888	·923	·957	·991	1·025	1·059	34	98	·799	·830	·861	·891	·922	·953	31
49	·886	·920	·955	·989	1·023	1·057	34	99	·797	·828	·859	·889	·920	·951	31
50	·884	·919	·953	·987	1·021	1·055	34	100	·796	·826	·857	·888	·918	·949	31

Digitized by Google

Table XII.

Conversion of Measures.

(Chiefly based on data contained in Col. Noble's Useful Tables.)

Length.

Metric to British.

Metres.	Yards.	Feet	Inches.
1	1·0936	3·2809	39·37
2	2·1873	6·5618	78·74
3	3·2809	9·8427	118·11
4	4·3745	13·1236	157·48
5	5·4682	16·4045	196·85
6	6·5618	19·6854	236·22
7	7·6554	22·9663	275·60
8	8·7491	26·2472	314·97
9	9·8427	29·5281	354·34

British to Metric.

Yds.	Mètres.	Ft.	Mètres.	Ins.	Centimètres.
1	0·91438	1	0·30479	1	2·5400
2	1·82877	2	0·60959	2	5·0799
3	2·74315	3	0·91438	3	7·6199
4	3·65753	4	1·21918	4	10·1598
5	4·57192	5	1·52397	5	12·6998
6	5·48630	6	1·82877	6	15·2397
7	6·40068	7	2·13356	7	17·7797
8	7·31507	8	2·43836	8	20·3196
9	8·22945	9	2·74315	9	22·8596

Metric Table of Length.

Millimètres.
10 = 1 centimètre.
100 = 1 décimètre,
1000 = 1 mètre.
Mètres.
10 = 1 décamètre.
100 = 1 hectomètre.
1000 = 1 kilomètre.

Explanation.—To convert any number from one measure to the other, take the values of the different multiples of 10 by shifting the position of the decimal point, and add together. Thus, find the number

of yards in 2354 mètres (see cols. 1 and 2)		of feet in 12·4 mètres (see cols. 1 and 3).		of inches in 30·5 centimètres (see cols. 1 and 4). Note, 1 m. = 100 cm.		of mètres in 1026 yards (see cols. 5 and 6).		of mètres in 1742 feet (see cols. 7 and 8).		of centimètres in 17·72 ins. (see cols. 9 and 10).	
mètres.	yards.	mètres.	feet.	cms.	inches.	yards.	mètres.	feet.	mètres.	inches.	cms.
2000	= 2187·3	10	= 32·809	30·0	= 11·811	1000	= 914·38	1000	= 304·79	10	= 25·400
300	= 328·09	2	= 6·562	·5	= 0·197	20	= 18·29	700	= 213·36	7	= 17·780
50	= 54·68	0·4	= 1·312			6	= 5·49	40	= 12·19	0·7	= 1·778
4	= 4·37							2	= 0·61	0·02	= 0·051
∴ 2354	= 2574·44	∴ 12·4	= 40·683	∴ 30·5	= 12·008	∴ 1026	= 938·16	∴ 1742	= 530·95	∴ 17·72	= 45·009

Note.—If a table of conversion is not at hand, an approximation to the equivalent in inches of a distance measured in centimètres may be obtained by multiplying by 0·4: thus, 30·5 cm. multiply by 0·4, and we have 12·2 inches; the real equivalent as shown above is 12·008 inches.

Weight.

Metric to British.

Kilogrammes.	Tons.	Pounds Avoirdupois.	Grains Troy.
1	·000984	2·2046	15432·3
2	·001968	4·4092	30864·7
3	·002953	6·6139	46297·0
4	003937	8·8185	61729·4
5	·004921	11·0231	77161·7
6	·005905	13·2277	92594·1
7	·006889	15·4323	108026·4
8	·007874	17·6370	123458·8
9	·008858	19·8416	138891·1

British to Metric.

Tons.	Metric tons or milliers	Pounds Avoirdupois.	Kilogrammes	Grains Troy.	Grammes.
1	1·016	1	0·4536	1	·0648
2	2·032	2	0·9072	2	·1296
3	3·048	3	1·3608	3	·1944
4	4·064	4	1·8144	4	·2592
5	5·080	5	2·2680	5	·3240
6	6·096	6	2·7216	6	·3888
7	7·112	7	3·1751	7	·4536
8	8·128	8	3·6287	8	·5184
9	9·144	9	4·0823	9	·5832

Metric Table of Weight.

Milligrammes.
10 = 1 centigramme.
100 = 1 décigramme.
1000 = 1 gramme.
Grammes.
10 = 1 décagramme.
100 = 1 hectogramme.
1000 = 1 kilogramme.
Kilogrammes.
10 = 1 myriagramme.
100 = 1 quintal.
1000 = 1 millier, or tonne, or metric ton.

Explanation.—To convert any number from one measure to the other, take the values of the different multiples of 10 by shifting the position of the decimal point, and add together. Thus, find the number

of tons in 35 tonnes. (see cols. 1 and 2).		of pounds in 56·3 kgms. (see cols. 1 and 3).		of grains in 120 grammes (see cols. 1 and 4).		of tonnes in 38 tons. (see cols. 5 and 6).		of kilogrammes in 68 pounds. (see cols. 7 and 8).		of grammes in 85 grains. (see cols. 9 and 10)	
tonnes.	tons.	kgms.	lbs.	grammes.	grains.	tons.	tonnes.	lbs.	kgs.	grains.	grammes
30	= 29·53	50	= 110·231	100	= 1543·23	30	= 30·48	60	= 27·216	80	= 5·184
5	= 4·92	6	= 13·228	20	= 308·65	8	= 8·13	8	= 3·629	5	= 0·324
		0·3	= 0·661								
∴ 35	= 34·45	∴ 56·3	= 124·120	∴ 120	= 1851·88	∴ 38	= 38·61	∴ 68	= 30·845	∴ 85	= 5·508

Note.—7000 grains troy = 1 pound avoirdupois.

Digitized by Google

TABLE XII—*continued.*

Pressure.

Metric and Atmospheric to British.

Kilogrammes per sq. cm.	Pounds per square inch.	Tons per square inch.	Atmospheres.	Pounds per square inch.	Tons per square inch.
1	14·223	·00635	1	14·7	·00656
2	28·446	·01270	2	29·4	·01313
3	42·668	·01905	3	44·1	·01969
4	56·891	·02540	4	58·8	·02625
5	71·114	·03175	5	73·5	·03281
6	85·337	·03810	6	88·2	·03938
7	99·560	·04445	7	102·9	·04594
8	113·783	·05080	8	117·6	·05250
9	128·005	·05715	9	132·3	·05906

British to Metric and Atmospheric.

Pounds per square inch.	Kilogrammes per sq. cm.	Atmospheres.	Tons per square inch.	Kilogrammes per sq. cm.	Atmospheres.
1	·07031	·068	1	157·49	152·38
2	·14062	·136	2	314·99	304·76
3	·21093	·204	3	472·48	457·14
4	·28124	·272	4	629·97	609·52
5	·35155	·340	5	787·47	761·91
6	·42186	·408	6	944·96	914·29
7	·49217	·476	7	1102·45	1066·67
8	·56248	·544	8	1259·95	1219·05
9	·63279	·612	9	1417·44	1371·43

EXPLANATION.—To convert any number from one measure to the other, take the values of the different multiples of 10 by shifting the position of the decimal point, and add together. Thus, find the number

of pounds per square inch in 32·1 kilogrammes per square centimètre (see cols. 1 and 2).		of tons per square inch in 3210 kilogrammes per square centimètre (see cols. 1 and 3).		of tons per square inch in 3254 atmospheres (see cols. 4 and 6).		of kilogrammes per square centimètre in 15 lbs. on the square inch (see cols. 7 and 8).		of kilogrammes per square centimètre in 18·3 tons per square inch (see cols. 10 and 11).		of atmospheres in 14·6 tons per square inch (see cols. 10 and 12)	
kgs. per sq. cm.	lbs. per sq in.	kgs. per sq. cm.	tons per sq. in.	atmospheres.	tons per sq. in.	lbs. per sq. in.	kgs. per sq. cm.	tons per sq. in.	kgs. per sq. cm.	tons per sq. in.	atmospheres.
30 =	426·68	3000 =	19·05	3000 =	19·69	10 =	0·7031	10 =	1574·9	10 =	1523·8
2 =	28·45	200 =	1·27	200 =	1·31	5 =	0·3516	8 =	1259·95	4 =	609·5
0·1 =	1·42	10 =	0·06	50 =	0·33			0·3 =	47·25	0·6 =	91·4
32·1 =	456·55	∴ 3210 =	20·38	4 =	0·03	∴ 15 =	1·0547	∴ 18·3 =	2882·1	∴ 14·6 =	2224·7
				∴ 3254 =	21·36						

Energy.

Metric to British.

Mètre-tons.	Foot-tons
1	3·2291
2	6·4581
3	9·6872
4	12·9162
5	16·1453
6	19·3743
7	22·6034
8	25·8324
9	29·0615

British to Metric.

Foot-tons.	Mètre tons.
1	0·3097
2	0·6194
3	0·9291
4	1·2388
5	1·5484
6	1·8581
7	2·1678
8	2·4775
9	2·7872

EXPLANATION.—To convert any number from one measure to the other, take the values of the different multiples of 10 by shifting the position of the decimal point, and add together. Thus, find the number

of foot-tons in 4367 mètre-tonnes (see cols. 1 and 2)		of mètre-tonnes in 3592 foot-tons (see cols. 3 and 4).	
mètre-tonnes.	foot-tons.	foot-tons.	mètre-tonnes.
4000 =	12916·2	3000 =	929·1
300 =	968·72	500 =	154·84
60 =	193·74	90 =	27·87
7 =	22·60	2 =	0·62
∴ 4367 =	14101·26	∴ 3592 =	1112·43

NOTE.—1000 mètre-tons is called a dinamode in Italy.

Digitized by Google

Table XIII.

Work capable of being done by One Pound of Exploding Gunpowder, in Expanding from Volume Unity with Unit Gravimetric Density.

(See Noble and Abel, "Researches on Explosives," *Phil. Trans. Roy. Soc.*, 29th May, 1879.)

Gravimetric volume.	Work in foot-tons.	Gravimetric volume.	Work in foot-tons.	Gravimetric volume.	Work in foot-tons.	Gravimetric volume.	Work in foot-tons.	Gravimetric volume.	Work in foot-tons.
1·00	0 000	1·54	33·681	2·95	68·568	6·10	99·282	13·00	127·036
1·01	0 980	1·56	34·500	3·00	69·347	6·20	99·915	14·00	129·602
1·02	1 936	1·58	35·301	3·05	70·109	6·30	100·536	15·00	131·970
1·03	2·870	1·60	36·086	3·10	70·854	6·40	101·145	16·00	134·168
1·04	3·782	1·62	36·855	3·15	71·585	6·50	101·744	17·00	136·218
1·05	4·674	1·64	37·608	3·20	72·301	6·60	102·333	18·00	138·138
1·06	5·547	1·66	38·346	3·25	73·002	6·70	102·912	19·00	139·944
1·07	6·399	1·68	39·069	3·30	73·690	6·80	103·480	20·00	141·647
1·08	7·234	1·70	39·778	3·35	74·365	6·90	104·038	21·00	143·258
1·09	8·051	1·72	40·474	3·40	75·027	7·00	104·586	22·00	144·788
1·10	8·852	1·74	41·156	3·45	75·677	7·10	105·125	23·00	146·242
1·11	9·637	1·76	41·827	3·50	76·315	7·20	105·655	24·00	147·629
1·12	10·406	1·78	42·486	3·55	76·940	7·30	106·176	25·00	148·960
1·13	11·160	1·80	43·133	3·60	77·553	7·40	106·688	26·00	150·232
1·14	11·899	1·82	43·769	3·65	78·156	7·50	107·192	27·00	151·452
1·15	12·625	1·84	44·394	3·70	78·749	7·60	107·688	28·00	152·622
1·16	13·338	1·86	45·009	3·75	79·332	7·70	108·177	29·00	153·743
1·17	14·038	1·88	45·614	3·80	79·905	7·80	108·659	30·00	154·819
1·18	14·725	1·90	46·209	3·85	80·469	7·90	109·133	31·00	155·857
1·19	15·400	1·92	46·795	3·90	81·024	8·00	109·600	32·00	156·856
1·20	16·063	1·94	47·372	3·95	81·570	8·10	110·060	33·00	157·824
1·21	16·716	1·96	47·940	4·00	82·107	8·20	110·514	34·00	158·771
1·22	17·359	1·98	48·499	4·10	83·157	8·30	110·962	35·00	159·678
1·23	17·992	2·00	49·050	4·20	84·176	8·40	111·404	36·00	160·556
1·24	18·614	2·05	50·383	4·30	85·166	8·50	111·840	37·00	161·411
1·25	19·226	2·10	51·673	4·40	86·128	8·60	112·270	38·00	162·241
1·26	19·828	2·15	52·922	4·50	87·064	8·70	112·695	39·00	163·046
1·27	20·420	2·20	54·132	4·60	87·975	8·80	113·114	40·00	163·828
1·28	21·001	2·25	55·304	4·70	88·861	8·90	113·528	41·00	
1·29	21·572	2·30	56·439	4·80	89·724	9·00	113·937	42·00	
1·30	22·133	2·35	57·539	4·90	90·565	9·10	114·341	43·00	
1·32	23·246	2·40	58·605	5·00	91·385	9·20	114·739	44·00	
1·34	24·324	2·45	59·639	5·10	92·186	9·30	115·133	45·00	
1·36	25·371	2·50	60·642	5·20	92·968	9·40	115·521	46·00	
1·38	26·389	2·55	61·616	5·30	93·732	9·50	115·905	47·00	
1·40	27·380	2·60	62·563	5·40	94·479	9·60	116·284	48·00	
1·42	28·348	2·65	63·486	5·50	95·210	9·70	116·659	49·00	
1·44	29·291	2·70	64·385	5·60	95·925	9·80	117·029	50·00	171
1·46	30·211	2·75	65·262	5·70	96·625	9·90	117·395		
1·48	31·109	2·80	66·119	5·80	97·310	10·00	117·757		
1·50	31·986	2·85	66·955	5·90	97·981	11·00	121·165		
1·52	32·843	2·90	67·771	6·00	98·638	12·00	124·239		

Digitized by Google

Table XIV.

Four Figure Logarithms.

No.	0	1	2	3	4	5	6	7	8	9	Fourth Figure. 1	2	3	4	5	6	7	8	9
10	0000	0043	0086	0128	0170	0212	0253	0294	0334	0374	4	8	12	17	21	25	29	33	37
11	0414	0453	0492	0531	0569	0607	0645	0682	0719	0755	4	8	11	15	19	23	26	30	34
12	0792	0828	0864	0899	0934	0969	1004	1038	1072	1106	3	7	10	14	17	21	24	28	31
13	1139	1173	1206	1239	1271	1303	1335	1367	1399	1430	3	6	10	13	16	19	23	26	29
14	1461	1492	1523	1553	1584	1614	1644	1673	1703	1732	3	6	9	12	15	18	21	24	27
15	1761	1790	1818	1847	1875	1903	1931	1959	1987	2014	3	6	8	11	14	17	20	22	25
16	2041	2068	2095	2122	2148	2175	2201	2227	2253	2279	3	5	8	11	13	16	18	21	24
17	2304	2330	2355	2380	2405	2430	2455	2480	2504	2529	2	5	7	10	12	15	17	20	22
18	2553	2577	2601	2625	2648	2672	2695	2718	2742	2765	2	5	7	9	12	14	16	19	21
19	2788	2810	2833	2856	2878	2900	2923	2945	2967	2989	2	4	7	9	11	13	16	18	20
20	3010	3032	3054	3075	3096	3118	3139	3160	3181	3201	2	4	6	8	11	13	15	17	19
21	3222	3243	3263	3284	3304	3324	3345	3365	3385	3404	2	4	6	8	10	12	14	16	18
22	3424	3444	3464	3483	3502	3522	3541	3560	3579	3598	2	4	6	8	10	12	14	15	17
23	3617	3636	3655	3674	3692	3711	3729	3747	3766	3784	2	4	6	7	9	11	13	15	17
24	3802	3820	3838	3856	3874	3892	3909	3927	3945	3962	2	4	5	7	9	11	12	14	16
25	3979	3997	4014	4031	4048	4065	4082	4099	4116	4133	2	3	5	7	9	10	12	14	15
26	4150	4166	4183	4200	4216	4232	4249	4265	4281	4298	2	3	5	7	8	10	11	13	15
27	4314	4330	4346	4362	4378	4393	4409	4425	4440	4456	2	3	5	6	8	9	11	13	14
28	4472	4487	4502	4518	4533	4548	4564	4579	4594	4609	2	3	5	6	8	9	11	12	14
29	4624	4639	4654	4669	4683	4698	4713	4728	4742	4757	1	3	4	6	7	9	10	12	13
30	4771	4786	4800	4814	4829	4843	4857	4871	4886	4900	1	3	4	6	7	9	10	11	13
31	4914	4928	4942	4955	4969	4983	4997	5011	5024	5038	1	3	4	6	7	8	10	11	12
32	5051	5065	5079	5092	5105	5119	5132	5145	5159	5172	1	3	4	5	7	8	9	11	12
33	5185	5198	5211	5224	5237	5250	5263	5276	5289	5302	1	3	4	5	6	8	9	10	12
34	5315	5328	5340	5353	5366	5378	5391	5403	5416	5428	1	3	4	5	6	8	9	10	11
35	5441	5453	5465	5478	5490	5502	5514	5527	5539	5551	1	2	4	5	6	7	9	10	11
36	5563	5575	5587	5599	5611	5723	5635	5647	5658	5670	1	2	4	5	6	7	8	10	11
37	5682	5694	5705	5717	5729	5740	5752	5763	5775	5786	1	2	3	5	6	7	8	9	10
38	5798	5809	5821	5832	5843	5855	5866	5877	5888	5899	1	2	3	5	6	7	8	9	10
39	5911	5922	5933	5944	5955	5966	5977	5988	5999	6010	1	2	3	4	6	7	8	9	10
40	6021	6031	6042	6053	6064	6075	6085	6096	6107	6117	1	2	3	4	5	6	7	9	10
41	6128	6138	6149	6160	6170	6180	6191	6201	6212	6222	1	2	3	4	5	6	7	8	9
42	6232	6243	6253	6263	6274	6284	6294	6304	6314	6325	1	2	3	4	5	6	7	8	9
43	6335	6345	6355	6365	6375	6385	6395	6405	6415	6425	1	2	3	4	5	6	7	8	9
44	6435	6444	6454	6464	6474	6484	6493	6503	6513	6522	1	2	3	4	5	6	7	8	9
45	6532	6542	6551	6561	6571	6580	6590	6599	6609	6618	1	2	3	4	5	6	7	8	9
46	6628	6637	6646	6656	6665	6675	6684	6693	6702	6712	1	2	3	4	5	6	7	7	8
47	6721	6730	6739	6749	6758	6767	6776	6785	6794	6803	1	2	3	4	5	5	6	7	8
48	6812	6821	6830	6839	6848	6857	6866	6875	6884	6893	1	2	3	4	4	5	6	7	8
49	6902	6911	6920	6928	6937	6946	6955	6964	6972	6981	1	2	3	4	4	5	6	7	8
50	6990	6998	7007	7016	7024	7033	7042	7050	7059	7067	1	2	3	3	4	5	6	7	8
51	7076	7084	7093	7101	7110	7118	7126	7135	7143	7152	1	2	3	3	4	5	6	7	8
52	7160	7168	7177	7185	7193	7202	7210	7218	7226	7235	1	2	2	3	4	5	6	7	7
53	7243	7251	7259	7267	7275	7284	7292	7300	7308	7316	1	2	2	3	4	5	6	6	7
54	7324	7332	7340	7348	7356	7364	7372	7380	7388	7396	1	2	2	3	4	5	5	6	7

Digitized by Google

TABLE XIV—*continued.*

Four Figure Logarithms.

No.	0	1	2	3	4	5	6	7	8	9	Fourth Figure. 1	2	3	4	5	6	7	8	9
55	7404	7412	7419	7427	7435	7443	7451	7459	7466	7474	1	2	2	3	4	5	5	6	7
56	7482	7490	7497	7505	7513	7520	7528	7536	7543	7551	1	2	2	3	4	5	5	6	7
57	7559	7566	7574	7582	7589	7597	7604	7612	7619	7627	1	2	2	3	4	5	5	6	7
58	7634	7642	7649	7657	7664	7672	7679	7686	7694	7701	1	1	2	3	4	4	5	6	7
59	7709	7716	7723	7731	7738	7745	7752	7760	7767	7774	1	1	2	3	4	4	5	6	7
60	7782	7789	7796	7803	7810	7818	7825	7832	7839	7846	1	1	2	3	4	4	5	6	6
61	7853	7860	7868	7875	7882	7889	7896	7903	7910	7917	1	1	2	3	4	4	5	6	6
62	7924	7931	7938	7945	7952	7959	7966	7973	7980	7987	1	1	2	3	3	4	5	6	6
63	7993	8000	8007	8014	8021	8028	8035	8041	8048	8055	1	1	2	3	3	4	5	5	6
64	8062	8069	8075	8082	8089	8096	8102	8109	8116	8122	1	1	2	3	3	4	5	5	6
65	8129	8136	8142	8149	8156	8162	8169	8176	8182	8189	1	1	2	3	3	4	5	5	6
66	8195	8202	8209	8215	8222	8228	8235	8241	8248	8254	1	1	2	3	3	4	5	5	6
67	8261	8267	8274	8280	8287	8293	8299	8306	8312	8319	1	1	2	3	3	4	5	5	6
68	8325	8331	8338	8344	8351	8357	8363	8370	8376	8382	1	1	2	3	3	4	4	5	6
69	8388	8395	8401	8407	8414	8420	8426	8432	8439	8445	1	1	2	3	3	4	4	5	6
70	8451	8457	8463	8470	8476	8482	8488	8494	8500	8506	1	1	2	2	3	4	4	5	6
71	8513	8519	8525	8531	8537	8543	8549	8555	8561	8567	1	1	2	2	3	4	4	5	5
72	8573	8579	8585	8591	8597	8603	8609	8615	8621	8627	1	1	2	2	3	4	4	5	5
73	8633	8639	8645	8651	8657	8663	8669	8675	8681	8686	1	1	2	2	3	4	4	5	5
74	8692	8698	8704	8710	8716	8722	8727	8733	8739	8745	1	1	2	2	3	4	4	5	5
75	8751	8756	8762	8768	8774	8779	8785	8791	8797	8802	1	1	2	2	3	3	4	5	5
76	8808	8814	8820	8825	8831	8837	8842	8848	8854	8859	1	1	2	2	3	3	4	5	5
77	8865	8871	8876	8882	8887	8893	8899	8904	8910	8915	1	1	2	2	3	3	4	4	5
78	8921	8927	8932	8938	8943	8949	8954	8960	8965	8971	1	1	2	2	3	3	4	4	5
79	8976	8982	8987	8993	8998	9004	9009	9015	9020	9025	1	1	2	2	3	3	4	4	5
80	9031	9036	9042	9047	9053	9058	9063	9069	9074	9079	1	1	2	2	3	3	4	4	5
81	9085	9090	9096	9101	9106	9112	9117	9122	9128	9133	1	1	2	2	3	3	4	4	5
82	9138	9143	9149	9154	9159	9165	9170	9175	9180	9186	1	1	2	2	3	3	4	4	5
83	9191	9196	9201	9206	9212	9217	9222	9227	9232	9238	1	1	2	2	3	3	4	4	5
84	9243	9248	9253	9258	9263	9269	9274	9279	9284	9289	1	1	2	2	3	3	4	4	5
85	9294	9299	9304	9309	9315	9320	9325	9330	9335	9340	1	1	2	2	3	3	4	4	5
86	9345	9350	9355	9360	9365	9370	9375	9380	9385	9390	1	1	2	2	3	3	4	4	5
87	9395	9400	9405	9410	9415	9420	9425	9430	9435	9440	0	1	1	2	2	3	3	4	4
88	9445	9450	9455	9460	9465	9469	9474	9479	9484	9489	0	1	1	2	2	3	3	4	4
89	9494	9499	9504	9509	9513	9518	9523	9528	9533	9538	0	1	1	2	2	3	3	4	4
90	9542	9547	9552	9557	9562	9566	9571	9576	9581	9586	0	1	1	2	2	3	3	4	4
91	9590	9595	9600	9605	9609	9614	9619	9624	9628	9633	0	1	1	2	2	3	3	4	4
92	9638	9643	9647	9652	9657	9661	9666	9671	9675	9680	0	1	1	2	2	3	3	4	4
93	9685	9689	9694	9699	9703	9708	9713	9717	9722	9727	0	1	1	2	2	3	3	4	4
94	9731	9736	9741	9745	9750	9754	9759	9763	9768	9773	0	1	1	2	2	3	3	4	4
95	9777	9782	9786	9791	9795	9800	9805	9809	9814	9818	0	1	1	2	2	3	3	4	4
96	9823	9827	9832	9836	9841	9845	9850	9854	9859	9863	0	1	1	2	2	3	3	4	4
97	9868	9872	9877	9881	9886	9890	9894	9899	9903	9908	0	1	1	2	2	3	3	4	4
98	9912	9917	9921	9926	9930	9934	9939	9943	9948	9952	0	1	1	2	2	3	3	4	4
99	9956	9961	9965	9969	9975	9978	9983	9987	9991	9996	0	1	1	2	2	3	3	4	4

Digitized by Google

Table XV.

Numbers to Logarithms.

logs.	0	1	2	3	4	5	6	7	8	9	1	2	3	4	5	6	7	8	9
·00	1000	1002	1005	1007	1009	1012	1014	1016	1019	1021	0	0	1	1	1	1	2	2	2
·01	1023	1026	1028	1030	1033	1035	1038	1040	1042	1045	0	0	1	1	1	1	2	2	2
·02	1047	1050	1052	1054	1057	1059	1062	1064	1067	1069	0	0	1	1	1	1	2	2	2
·03	1072	1074	1076	1079	1081	1084	1086	1089	1091	1094	0	0	1	1	1	1	2	2	2
·04	1096	1099	1102	1104	1107	1109	1112	1114	1117	1119	0	1	1	1	1	2	2	2	2
·05	1122	1125	1127	1130	1132	1135	1138	1140	1143	1146	0	1	1	1	1	2	2	2	2
·06	1148	1151	1153	1156	1159	1161	1164	1167	1169	1172	0	1	1	1	1	2	2	2	2
·07	1175	1178	1180	1183	1186	1189	1191	1194	1197	1199	0	1	1	1	1	2	2	2	2
·08	1202	1205	1208	1211	1213	1216	1219	1222	1225	1227	0	1	1	1	1	2	2	2	3
·09	1230	1233	1235	1239	1242	1245	1247	1250	1253	1256	0	1	1	1	1	2	2	2	3
·10	1259	1262	1265	1268	1271	1274	1276	1279	1282	1285	0	1	1	1	1	2	2	2	3
·11	1288	1291	1294	1297	1300	1303	1306	1309	1312	1315	0	1	1	1	2	2	2	2	3
·12	1318	1321	1324	1327	1330	1334	1337	1340	1343	1346	0	1	1	1	2	2	2	2	3
·13	1349	1352	1355	1358	1361	1365	1368	1371	1374	1377	0	1	1	1	2	2	2	3	3
·14	1380	1384	1387	1390	1393	1396	1400	1403	1406	1409	0	1	1	1	2	2	2	3	3
·15	1413	1416	1419	1422	1426	1429	1432	1435	1439	1442	0	1	1	1	2	2	2	3	3
·16	1445	1449	1452	1455	1459	1462	1466	1469	1472	1476	0	1	1	1	2	2	2	3	3
·17	1479	1483	1486	1489	1493	1496	1500	1503	1507	1510	0	1	1	1	2	2	2	3	3
·18	1514	1517	1521	1524	1528	1531	1535	1538	1542	1545	0	1	1	1	2	2	2	3	3
·19	1549	1552	1556	1560	1563	1567	1570	1574	1578	1581	0	1	1	1	2	2	3	3	3
·20	1585	1589	1592	1596	1600	1603	1607	1611	1614	1618	0	1	1	1	2	2	3	3	3
·21	1622	1626	1629	1633	1637	1641	1644	1648	1652	1656	0	1	1	2	2	2	3	3	3
·22	1660	1663	1667	1671	1675	1679	1683	1687	1690	1694	0	1	1	2	2	2	3	3	3
·23	1698	1702	1706	1710	1714	1718	1722	1726	1730	1734	0	1	1	2	2	2	3	3	4
·24	1738	1742	1746	1750	1754	1758	1762	1766	1770	1774	0	1	1	2	2	2	3	3	4
·25	1778	1782	1786	1791	1795	1799	1803	1807	1811	1816	0	1	1	2	2	2	3	3	4
·26	1820	1824	1828	1832	1837	1841	1845	1849	1854	1858	0	1	1	2	2	3	3	3	4
·27	1862	1866	1871	1875	1879	1884	1888	1892	1897	1901	0	1	1	2	2	3	3	3	4
·28	1905	1910	1914	1919	1923	1928	1932	1936	1941	1945	0	1	1	2	2	3	3	4	4
·29	1950	1954	1959	1963	1968	1972	1977	1982	1986	1991	0	1	1	2	2	3	3	4	4
·30	1995	2000	2004	2009	2014	2018	2023	2028	2032	2037	0	1	1	2	2	3	3	4	4
·31	2042	2046	2051	2056	2061	2065	2070	2075	2080	2084	0	1	1	2	2	3	3	4	4
·32	2089	2094	2099	2104	2109	2113	2118	2123	2128	2133	0	1	1	2	2	3	3	4	4
·33	2138	2143	2148	2153	2158	2163	2168	2173	2178	2183	0	1	1	2	2	3	3	4	4
·34	2188	2193	2198	2203	2208	2213	2218	2223	2223	2234	1	1	2	2	3	3	4	4	5
·35	2239	2244	2249	2254	2259	2265	2270	2275	2280	2286	1	1	2	2	3	3	4	4	5
·36	2291	2296	2301	2307	2312	2317	2323	2328	2333	2339	1	1	2	2	3	3	4	4	5
·37	2344	2350	2355	2360	2366	2371	2377	2382	2388	2393	1	1	2	2	3	3	4	4	5
·38	2399	2404	2410	2415	2421	2427	2432	2438	2443	2449	1	1	2	2	3	3	4	4	5
·39	2455	2460	2466	2472	2477	2483	2489	2495	2500	2506	1	1	2	2	3	3	4	5	5
·40	2512	2518	2523	2529	2535	2541	2547	2553	2559	2564	1	1	2	2	3	4	4	5	5
·41	2570	2576	2582	2588	2594	2600	2606	2612	2618	2624	1	1	2	2	3	4	4	5	5
·42	2630	2636	2642	2649	2655	2661	2667	2673	2679	2685	1	1	2	2	3	4	4	5	6
·43	2692	2698	2704	2710	2716	2723	2729	2735	2742	2748	1	1	2	3	3	4	4	5	6
·44	2754	2761	2767	2773	2780	2786	2793	2799	2805	2812	1	1	2	3	3	4	4	5	6
·45	2818	2825	2831	2838	2844	2851	2858	2864	2871	2877	1	1	2	3	3	4	5	5	6
·46	2884	2891	2897	2904	2911	2917	2924	2931	2938	2944	1	1	2	3	3	4	5	5	6
·47	2951	2958	2965	2972	2979	2985	2992	2999	3006	3013	1	1	2	3	3	4	5	5	6
·48	3020	3027	3034	3041	3048	3055	3062	3069	3076	3083	1	1	2	3	4	4	5	5	6
·49	3090	3097	3105	3112	3119	3126	3133	3141	3148	3155	1	1	2	3	4	4	5	5	6

Digitized by Google

TABLE XV.—*continued.*

Numbers to Logarithms.

logs.	0	1	2	3	4	5	6	7	8	9	1	2	3	4	5	6	7	8	9
·50	3162	3170	3177	3184	3192	3199	3206	3214	3221	3228	1	1	2	3	4	4	5	6	7
·51	3236	3243	3251	3258	3266	3273	3281	3289	3296	3304	1	2	2	3	4	5	5	6	7
·52	3311	3319	3327	3334	3342	3350	3357	3365	3373	3381	1	2	2	3	4	5	5	6	7
·53	3388	3396	3404	3412	3420	3428	3436	3443	3451	3459	1	2	2	3	4	5	6	6	7
·54	3467	3475	3483	3491	3499	3508	3516	3524	3532	3540	1	2	2	3	4	5	6	6	7
·55	3548	3556	3565	3573	3581	3589	3597	3606	3614	3622	1	2	2	3	4	5	6	7	7
·56	3631	3639	3648	3656	3664	3673	3681	3690	3698	3707	1	2	3	3	4	5	6	7	8
·57	3715	3724	3733	3741	3750	3758	3767	3776	3784	3793	1	2	3	3	4	5	6	7	8
·58	3802	3811	3819	3828	3837	3846	3855	3864	3873	3882	1	2	3	4	4	5	6	7	8
·59	3890	3899	3908	3917	3926	3936	3945	3954	3963	3972	1	2	3	4	5	5	6	7	8
·60	3981	3990	3999	4009	4018	4027	4036	4046	4055	4064	1	2	3	4	5	6	7	7	8
·61	4074	4083	4093	4102	4111	4121	4130	4140	4150	4159	1	2	3	4	5	6	7	8	9
·62	4169	4178	4188	4198	4207	4217	4227	4236	4246	4256	1	2	3	4	5	6	7	8	9
·63	4266	4276	4285	4295	4305	4315	4325	4335	4345	4355	1	2	3	4	5	6	7	8	9
·64	4365	4375	4385	4395	4406	4416	4426	4436	4446	4457	1	2	3	4	5	6	7	8	9
·65	4467	4477	4487	4498	4508	4519	4529	4539	4550	4560	1	2	3	4	5	6	7	8	9
·66	4571	4581	4592	4603	4613	4624	4634	4645	4656	4667	1	2	3	4	5	6	7	9	10
·67	4677	4688	4699	4710	4721	4732	4742	4753	4764	4775	1	2	3	4	5	7	8	9	10
·68	4786	4797	4808	4819	4831	4842	4853	4864	4875	4887	1	2	3	4	6	7	8	9	10
·69	4898	4909	4920	4932	4943	4955	4966	4977	4989	5000	1	2	3	5	6	7	8	9	10
·70	5012	5023	5035	5047	5058	5070	5082	5093	5105	5117	1	2	4	5	6	7	8	9	11
·71	5129	5140	5152	5164	5176	5188	5200	5212	5224	5236	1	2	4	5	6	7	8	10	11
·72	5248	5260	5272	5284	5297	5309	5321	5333	5346	5358	1	2	4	5	6	7	9	10	11
·73	5370	5383	5395	5408	5420	5433	5445	5458	5470	5483	1	3	4	5	6	8	9	10	11
·74	5495	5508	5521	5534	5546	5559	5572	5585	5598	5610	1	3	4	5	6	8	9	10	12
·75	5623	5636	5649	5662	5675	5689	5702	5715	5728	5741	1	3	4	5	7	8	9	10	12
·76	5754	5768	5781	5794	5808	5821	5834	5848	5961	5875	1	3	4	5	7	8	9	11	12
·77	5888	5902	5916	5929	5943	5957	5970	5984	5998	6012	1	3	4	5	7	8	10	11	12
·78	6026	6039	6053	6067	6081	6095	6109	6124	6138	6152	1	3	4	6	7	8	10	11	13
·79	6166	6180	6194	6209	6223	6237	6252	6266	6281	6295	1	3	4	6	7	9	10	11	13
·80	6310	6324	6339	6353	6368	6383	6397	6412	6427	6442	1	3	4	6	7	9	10	12	13
·81	6457	6471	6486	6501	6516	6531	6546	6561	6577	6592	2	3	5	6	8	9	11	12	13
·82	6607	6622	6637	6653	6668	6683	6699	6714	6730	6745	2	3	5	6	8	9	11	12	14
·83	6761	6776	6792	6808	6823	6839	6855	6871	6887	6902	2	3	5	6	8	9	11	13	14
·84	6918	6934	6950	6966	6982	6998	7015	7031	7047	7063	2	3	5	6	8	10	11	13	15
·85	7079	7096	7112	7129	7145	7161	7178	7194	7211	7228	2	3	5	7	8	10	12	13	15
·86	7244	7261	7278	7295	7311	7328	7345	7362	7379	7396	2	3	5	7	8	10	12	13	15
·87	7413	7430	7447	7464	7482	7499	7516	7534	7551	7568	2	3	5	7	9	10	12	14	16
·88	7586	7603	7621	7638	7656	7674	7601	7709	7727	7745	2	4	5	7	9	11	12	14	16
·89	7762	7780	7798	7816	7834	7852	7870	7889	7907	7925	2	4	5	7	9	11	13	14	16
·90	7943	7962	7980	7998	8017	8035	8054	8072	8091	8110	2	4	6	7	9	11	13	15	17
·91	8128	8147	8166	8185	8204	8222	8241	8260	8279	8299	2	4	6	8	9	11	13	15	17
·92	8318	8337	8356	8375	8395	8414	8433	8453	8472	8492	2	4	6	8	10	12	14	16	17
·93	8511	8531	8551	8570	8590	8610	8630	8650	8670	8690	2	4	6	8	10	12	14	16	18
·94	8710	8730	8750	8770	8790	8810	8831	8851	8872	8892	2	4	6	8	10	12	14	16	18
·95	8913	8933	8954	8974	8995	9016	9036	9057	9078	9099	2	4	6	8	10	12	15	17	19
·96	9120	9141	9162	9183	9204	9226	9247	9268	9290	9311	2	4	6	8	11	13	15	17	19
·97	9333	9354	9376	9397	9419	9441	9462	9484	9506	9528	2	4	7	9	11	13	15	17	20
·98	9550	9572	9594	9616	9638	9661	9683	9705	9727	9750	2	4	7	9	11	13	16	18	20
·99	9772	9795	9817	9840	9863	9886	9908	9931	9954	9977	2	5	7	9	11	14	16	18	20

Digitized by Google

Table XVI.

Logarithms of Sines, Tangents, and Secants.

Angle.	Sine.	Diff.	Cosec.	Tan.	Diff.	Cotan.	Secant.	Diff.	Cosine.	
0° 0′	Infin. neg.	Infin.	Infinite.	Infin. neg.	Infin.	Infinite.	10·0000	0	10·0000	90° 0′
0 1	6·4637	3010	13·5363	6·4637	3010	13·5363	10·0000	0	10·0000	89 59
0 2	6·7648	1761	13·2352	6·7648	1761	13·2352	10·0000	0	10·0000	89 58
0 3	6·9408	1249	13·0592	6·9408	1249	13·0592	10·0000	0	10·0000	89 57
0 4	7·0658	969	12·9342	7·0658	969	12·9342	10·0000	0	10·0000	89 56
0 5	7·1627	792	12·8373	7·1627	792	12·8373	10·0000	0	10·0000	89 55
0 6	7·2419	669	12·7581	7·2419	669	12·7581	10·0000	0	10·0000	99 54
0 8	7·3668	512	12·6332	7·3668	512	12·6332	10·0000	0	10·0000	89 52
0 10	7·4637	414	12·5363	7·4637	414	12·5363	10·0000	0	10·0000	89 50
0 12	7·5429	348	12·4571	7·5429	348	12·4571	10·0000	0	10·0000	89 48
0 14	7·6099	300	12·3901	7·6099	300	12·3901	10·0000	0	10·0000	89 46
0 16	7·6678	263	12·3322	7·6678	263	12·3322	10·0000	0	10·0000	89 44
0 18	7·7190	235	12·2810	7·7190	235	12·2810	10·0000	0	10·0000	89 42
0 20	7·7648	212	12·2352	7·7648	212	12·2352	10·0000	0	10·0000	89 40
0 22	7·8061	193	12·1939	7·8062	193	12·1938	10·0000	0	10·0000	89 38
0 24	7·8439	177	12·1561	7·8439	177	12·1561	10·0000	0	10·0000	89 36
0 26	7·8787	164	12·1213	7·8787	164	12·1213	10·0000	0	10·0000	89 34
0 28	7·9109	152	12·0891	7·9109	152	12·0891	10·0000	0	10·0000	89 32
0 30	7·9408	137	12·0592	7·9409	137	12·0591	10·0000	0	10·0000	89 30
0 35	8·0078	118	11·9922	8·0078	118	11·9922	10·0000	0	10·0000	89 25
0 40	8·0658	104	11·9342	8·0658	104	11·9342	10·0000	0	10·0000	89 20
0 45	8·1169	93	11·8831	8·1170	93	11·8830	10·0000	0	10·0000	89 15
0 50	8·1627	84	11·8373	8·1627	84	11·8373	10·0000	0	10·0000	89 10
0 55	8·2041	77	11·7959	8·2041	77	11·7959	10·0001	0	9·9999	89 5
1 0	8·2419	70	11·7581	8·2419	70	11·7581	10·0001	0	9·9999	89 0
1 5	8·2766	65	11·7234	8·2767	65	11·7233	10·0001	0	9·9999	88 55
1 10	8·3088	60	11·6912	8·3089	60	11·6911	10·0001	0	9·9999	88 50
1 15	8·3388	56	11·6612	8·3389	56	11·6611	10·0001	0	9·9999	88 45
1 20	8·3668	53	11·6332	8·3669	53	11·6331	10·0001	0	9·9999	88 40
1 25	8·3931	50	11·6069	8·3932	50	11·6068	10·0001	0	9·9999	88 35
1 30	8·4179	46	11·5821	8·4181	46	11·5819	10·0001	0	9·9999	88 30
1 40	8·4637	42	11·5363	8·4638	42	11·5362	10·0002	0	9·9998	88 20
1 50	8·5050	38	11·4950	8·5053	38	11·4947	10·0002	0	9·9998	88 10
2 0	8·5428	35	11·4572	8·5431	35	11·4569	10·0003	0	9·9997	88 0
2 10	8·5776	32	11·4224	8·5779	32	11·4221	10·0003	0	9·9997	87 50
2 20	8·6097	30	11·3903	8·6101	30	11·3899	10·0004	0	9·9996	87 40
2 30	8·6397	28	11·3603	8·6401	28	11·3599	10·0004	0	9·9996	87 30
2 40	8·6677	26	11·3323	8·6682	26	11·3318	10·0005	0	9·9995	87 20
2 50	8·6940	25	11·3060	8·6945	25	11·3055	10·0005	0	9·9995	87 10
3 0	8·7188	24	11·2812	8·7194	24	11·2806	10·0006	0	9·9994	87 0
3 10	8·7423	22	11·2577	8·7429	22	11·2571	10·0007	0	9·9993	86 50
3 20	8·7645	21	11·2355	8·7652	21	11·2348	10·0007	0	9·9993	86 40
3 30	8·7857	20	11·2143	8·7865	20	11·2135	10·0008	0	9·9992	86 30
3 40	8·8059	19	11·1941	8·8067	19	11·1933	10·0009	0	9·9991	86 20
3 50	8·8251	18	11·1749	8·8261	18	11·1739	10·0010	0	9·9990	86 10
4 0	8·8436	18	11·1564	8·8446	18	11·1554	10·0011	0	9·9989	86 0
4 10	8·8613	17	11·1387	8·8624	17	11·1376	10·0012	0	9·9989	85 50
4 20	8·8783	16	11·1217	8·8795	16	11·1205	10·0011	0	9·9988	85 40
4 30	8·8946	16	11·1054	8·8960	16	11·1040	10·0013	0	9·9987	85 30
4 40	8·9104	15	11·0896	8·9118	15	11·0882	10·0014	0	9·9986	85 20
4 50	8·9256	15	11·0744	8·9272	15	11·0728	10·0015	0	9·9985	85 10
5 0	8·9403	14	11·0597	8·9420	14	11·0580	10·0017	0	9·9983	85 0
5 10	8·9545	14	11·0455	8·9563	14	11·0437	10·0018	0	9·9982	84 50
5 20	8·9682	13	11·0318	8·9701	13	11·0299	10·0019	0	9·9981	84 40
5 30	8·9816	13	11·0184	8·9836	13	11·0164	10·0020	0	9·9980	84 30
5 40	8·9945	13	11·0055	8·9966	13	11·0034	10·0021	0	9·9979	84 20
5 50	9·0070	12	10·9930	9·0093	12	10·9907	10·0023	0	9·9977	84 10
	Cosine.	Diff. for 1′.	Secant.	Cotan.	Diff. for 1′.	Tan.	Cosec.	Diff. for 1′.	Sine.	Angle.

Digitized by Google

TABLE XVI—*continued.*

Angle.	Sine.	Diff.	Cosec.	Tan.	Diff.	Cotan.	Secant.	Diff.	Cosine.	...
6° 0′	9·0192	12	10·9808	9·0216	12	10·9784	10·0024	0	9·9976	84° 0′
6 10	9·0311	12	10·9689	9·0336	12	10·9664	10·0025	0	9·9975	83 50
6 20	9·0426	11	10·9574	9·0453	11	10·9547	10·0027	0	9·9973	83 40
6 30	9·0539	11	10·9461	9·0567	11	10·9433	10·0028	0	9·9972	83 30
6 40	9·0648	11	10·9352	9·0678	11	10·9322	10·0029	0	9·9971	83 20
6 50	9·0755	10	10·9245	9·0786	11	10·9214	10·0031	0	9·9969	83 10
7 0	9·0859	10	10·9141	9·0891	10	10·9109	10·0032	0	9·9968	83 0
7 10	9·0961	10	10·9039	9·0995	10	10·9005	10·0034	0	9·9966	82 50
7 20	9·1060	10	10·8940	9·1096	10	10·8904	10·0036	0	9·9964	82 40
7 30	9·1157	10	10·8843	9·1194	10	10·8806	10·0037	0	9·9963	82 30
7 40	9·1252	9	10·8748	9·1291	9	10·8709	10·0039	0	9·9961	82 20
7 50	9·1345	9	10·8655	9·1385	9	10·8615	10·0041	0	9·9959	82 10
8 0	9·1436	9	10·8564	9·1478	9	10·8522	10·0042	0	9·9958	82 6
8 10	9·1525	9	10·8475	9·1569	9	10·8431	10·0044	0	9·9956	81 50
8 20	9·1612	9	10·8388	9·1658	9	10·8342	10·0046	0	9·9954	81 40
8 30	9·1697	85	10·8303	9·1745	85	10·8255	10·0048	2	9·9952	81 30
9 0	9·1943	78	10·8057	9·1997	80	10·8003	10·0054	2	9·9946	81 0
9 30	9·2176	74	10·7824	9·2236	76	10·7764	10·0060	2	9·9940	80 30
10 0	9·2397	70	10·7603	9·2463	72	10·7537	10·0066	2	9·9934	80 0
10 30	9·2606	67	10·7394	9·2680	69	10·7320	10·0073	2	9·9927	79 30
11 0	9·2806	64	10·7194	9·2887	66	10·7113	10·0081	2	9·9919	79 0
11 30	9·2997	61	10·7003	9·3085	63	10·6915	10·0088	3	9·9912	78 30
12 0	9·3179	58	10·6821	9·3275	61	10·6725	10·0096	3	9·9904	78 0
12 30	9·3353	56	10·6647	9·3458	59	10·6542	10·0104	3	9·9896	77 30
13 0	9·3521	54	10·6479	9·3634	57	10·6366	10·0113	3	9·9887	77 0
13 30	9·3682	52	10·6318	9·3804	55	10·6196	10·0122	3	9·9878	76 30
14 0	9·3837	50	10·6163	9·3968	53	10·6032	10·0131	3	9·9869	76 0
14 30	9·3986	48	10·6014	9·4127	51	10·5873	10·0141	3	9·9859	75 30
15 0	9·4130	46	10·5870	9·4281	50	10·5719	10·0151	3	9·9849	75 0
15 30	9·4269	45	10·5731	9·4430	48	10·5570	10·0161	3	9·9839	74 30
16° 0′	9·4403	43	10·5597	9·4575	47	10·5425	10·0172	4	9·9828	74 0
17 0	9·4659	40	10·5341	9·4853	44	10·5147	10·0194	4	9·9806	73 0
18 0	9·4900	38	10·5100	9·5118	42	10·4882	10·0218	4	9·9782	72 0
19 0	9·5126	36	10·4874	9·5370	40	10·4630	10·0243	4	9·9757	71 0
20 0	9·5341	34	10·4659	9·5611	39	10·4389	10·0270	5	9·9730	70 0
21 0	9·5543	32	10·4457	9·5842	37	10·4158	10·0298	5	9·9702	69 0
22 0	9·5736	31	10·4264	9·6064	36	10·3936	10·0328	5	9·9672	68 0
23 0	9·5919	29	10·4081	9·6279	35	10·3721	10·0360	5	9·9640	67 0
24 0	9·6093	28	10·3907	9·6486	34	10·3514	10·0393	6	9·9607	66 0
25 0	9·6259	27	10·3741	9·6687	33	10·3313	10·0427	6	9·9573	65 0
26 0	9·6418	25	10·3582	9·6882	32	10·3118	10·0463	6	9·9537	64 0
27 0	9·6570	24	10·3430	9·7072	31	10·2928	10·0501	7	9·9499	63 0
28 0	9·6716	23	10·3284	9·7257	30	10·2743	10·0541	7	9·9459	62 0
29 0	9·6856	22	10·3144	9·7438	29	10·2562	10·0582	7	9·9418	61 0
30 0	9·6990	21	10·3010	9·7614	29	10·2386	10·0625	7	9·9375	60 0
31 0	9·7118	21	10·2882	9·7788	28	10·2212	10·0669	8	9·9331	59 0
32 0	9·7242	20	10·2758	9·7958	28	10·2042	10·0716	8	9·9284	58 0
33 0	9·7361	19	10·2639	9·8125	28	10·1875	10·0764	8	9·9236	57 0
34 0	9·7476	19	10·2524	9·8290	27	10·1710	10·0814	9	9·9186	56 0
35 0	9·7586	18	10·2414	9·8452	27	10·1548	10·0866	9	9·9134	55 0
36 0	9·7692	17	10·2308	9·8613	26	10·1387	10·0920	9	9·9080	54 0
37 0	9·7795	16	10·2205	9·8771	26	10·1229	10·0977	10	9·9023	53 0
38 0	9·7893	16	10·2107	9·8928	26	10·1072	10·1035	10	9·8965	52 0
39 0	9·7989	15	10·2011	9·9084	26	10·0916	10·1095	10	9·8905	51 0
40 0	9·8081	15	10·1919	9·9238	26	10·0762	10·1157	11	9·8843	50 0
41 0	9·8169	14	10·1831	9·9392	25	10·0608	10·1222	11	9·8778	49 0
42 0	9·8255	14	10·1745	9·9544	25	10·0456	10·1289	12	9·8711	48 0
43 0	9·8338	13	10·1662	9·9697	25	10·0303	10·1359	12	9·8641	47 0
44 0	9·8418	13	10·1582	9·9848	25	10·0152	10·1431	12	9·8569	46 0
45 0	9·8495	12	10·1505	10·0000	25	10·0000	10·1505	13	9·8495	45 0
...	Cosine.	Diff. for 10′.	Secant.	Cotan.	Diff. for 10′.	Tan.	Cosec.	Diff. for 10′.	Sine.	Angle.

Digitized by Google

APPENDIX.

ARMOUR.

Armour may be divided into three classes: hard, soft, and hard-faced.

Hard Armour.

The main representative of this class is chilled cast-iron which has been largely used on the Continent, mainly on sea fronts, in the form of cupolas, It cannot be perforated in the strict sense of the term, but must be broken up. Fracture appears to depend upon some function of the striking energy of the attacking projectile, but to be independent of its diameter. Even when capable of withstanding one or two blows from the larger natures of projectile, chilled iron is apt to crumble under the continuous bombardment of steel armour-piercing projectiles from guns of medium calibre.

Soft Armour.

Wrought-iron and mild steel belong to this class. They can be perforated, but do not easily break up, though steel has a greater tendency in this direction than wrought-iron. Perforation appears to be directly proportional to some powers of the weight and striking velocity of an attacking projectile, and to be inversely proportional to some power of its diameter.

Wrought-iron armour is only to be found in a few old ships, in old-fashioned coast defences, and possibly in some inland forts.

A considerable amount of steel armour of the soft class is still to be found in permanent works on land and to a less extent in ships.

Hard-Faced Armour.

Compound armour is the earliest armour of this class. In it an attempt was made to combine the advantages of both the foregoing classes by welding a hard steel face on to a wrought-iron foundation plate, thus combining a tough body to hold the plate together with a surface hard enough to break up an attacking projectile.

A rigid backing was necessary to bring out fully the good qualities of compound plates, and when insufficiently supported they were probably not the equal of the best steel plates.

Both compound and ordinary steel armour were superseded in 1891 by steel plates made by the Harvey process, which consisted mainly in carburizing, or cementing as it is usually termed, the surface of a suitable steel plate, the carburized surface being subsequently chilled by jets of cold water according to the method invented by Capt. T. J. Tresidder, C.M.G., late R.E. In this way a plate was obtained which possessed in a very high degree the special merits of compound armour without the great defect of the latter—a tendency for the hard steel surface plate to crack and become detached from the iron foundation plate.

Digitized by Google

Since 1893 considerable improvements, in great measure due to the firm of Krupp, of Essen, have been effected in the composition of armour plate steel and also in its treatment during manufacture.

Special steel alloys containing from 3 to 4 °/₀ of nickel and from 1 to 2 °/₀ of chromium, in addition to small percentages of manganese and carbon, which are very much harder and tougher than ordinary steel, are employed, and the plates made from this material undergo a very elaborate heat treatment during manufacture and before the final chilling.

Both cemented and uncemented plates of the Krupp type are made, the latter being largely used when armour of less than 4 inches is required and, in some cases, for curved structures of greater thickness.

The composition of the non-cemented plates differs little, if at all, from that of the cemented plates, and the process of manufacture is also similar, except as regards cementation.

Armour of the hard-faced class to which all the above belong (the K.N.C. plates, although not superficially carburized, have extremely hard surfaces) is intermediate in character between hard and soft armour. The manner in which it yields when attacked is discussed below.

Armour-Piercing Projectiles.

Armour-piercing shot are no longer made for the British service, and capped shell which have a bursting charge capacity of at least 2 °/₀ of the total weight of the projectile are the only armour-piercing projectiles to be manufactured in future.

The steel of which these shell are made is an alloy, the composition of which varies with the manufacturer, but which in addition to carbon usually contains chromium combined with one or more of the following elements: nickel, manganese, tungsten, molybdenum.

The cap, which is of mild steel, weighing from 5 to 2½ °/₀ of the weight of the shell, varies in shape according to the manufacturer and is attached to the point of the projectile in various ways, a common method being to press it hydraulically or otherwise into notches or grooves in the head of the shell. Its function is to support the point of the projectile when the latter strikes the plate and so enable it to get unbroken through the hard surface layer of Harveyed or Krupped plates. It would probably not be of any assistance in attacking soft armour, and to be thoroughly effective, the projectile must be strong enough to remain intact until perforation has been accomplished.

The cap does not appear to be effective below a striking velocity of about 1700 f/s. or outside an angle of about 30° to the normal, and beyond these limits the action of a capped A.P. projectile does not differ from that of an uncapped one.

Boring and Punching.

When an uncapped projectile or an A.P. projectile below the velocity referred to above strikes a hard-faced plate, its head is crushed and driven back into the body of the projectile, breaking it up, and the tendency of its action on the plate is to punch out a coned disc, the base of the cone being at the back of the plate. The maximum diameter of the disc is frequently more than three times that of the attacking projectile, the disproportion being most marked when the diameter of the projectile is considerably in excess of the thickness of the plate.

Digitized by Google

When, on the other hand, a capped A.P. projectile strikes a hard-faced plate with sufficient velocity, the cap has the effect of holding the point of the projectile together until it has penetrated the hard surface layers. The projectile can then perform its proper work as a boring tool, and if it has sufficient energy to get through the plate, drills a hole in it of approximately the same diameter as itself. Less energy is required to perforate than to punch, and consequently an A.P. projectile can get through a plate at a very much lower velocity capped than uncapped. Occasionally the action of a capped projectile in perforating a plate is not truly a boring one but a more or less cylindrical plug of metal of approximately the same diameter as the shot is punched out. In such cases the point of the projectile will usually be found blunted or broken off from the body, indicating that full benefit has not been received from the cap.

In the case of punching it is found that the resisting value of a plate falls off in proportion as the diameter of the attacking projectile exceeds the thickness of the plate. For instance, a 6″ K.C. plate may have a figure of merit (value compared to wrought-iron) of 2·6 against a 6″, but not more than 2·2 against a 9·2″ uncapped shot. In the case of perforation, however, there is some reason to think that the advantage is relatively with projectiles of smaller diameter than the thickness of the plate attacked, though the difference is not very marked; thus a plate whose figure of merit against a capped projectile of its own calibre is, say, 2·2, may have a figure of merit of not more than 2 against a projectile of less diameter than its own thickness.

The figure of merit of Harveyed or Krupped armour varies also with its thickness, being at a maximum when the plate is about 6″ thick, falling off above and, possibly, below this point.

Roughly speaking, the following table gives the comparative values of various kinds of armour against uncapped A.P. shot of calibre equivalent to the thickness of the plate or similar capped A.P. projectiles with striking velocity below about 1700 f/s. :—

Wrought-iron	1·0
Mild steel	1·3
Compound...	1·3
Harveyed steel (up to 1897) ...	1·7 to 2·2 according to thickness
Krupp non-cemented steel (K.N.C.) or Harveyed steel since 1897 ...	2·1 to 2·4 „ „ „
Krupp cemented steel (K.C.) ...	2·3 to 2·7 „ „ „

Against capped A.P. projectiles, with striking velocities of 1700 f/s. and over, the figure of merit of K.C. plates is approximately 2 0.

The penetrative power of uncapped A.P. and common shell may be taken as roughly 0·8 and 0·6 times, respectively, that of uncapped A.P. shot.

On the continent the figure of merit referred to above is not employed and the various classes and thicknesses of armour are compared by finding "R," the ratio between the velocity required for the actual perforation of any given plate and that required for the perforation of mild steel of the same thickness, by de Marre's formula given below.

Digitized by Google

A.P. Formulas.

These are for the most part empirical.

Leaving on one side the case of hard armour, whose fracture seems to depend on the striking energy only of the projectile and to be independent of its diameter, *vide* p. 36 "Armour and its attack by Artillery," by Capt. C. Orde Browne, late R.A., it is generally agreed that both perforation and punching vary directly as some powers of the weight and velocity of the projectile and inversely as some power of its diameter.

Assuming the formula to be monomial, the simplest method of determining these exponents is by means of a logarithmic chart.

If, for example, it is desired to obtain a monomial formula for the perforation of K.C. armour by capped A.P. shell, actual results obtained by firing any particular calibre of gun against varying thicknesses of plate should be plotted on a logarithmic chart, so that the horizontal co-ordinates represent velocities (v), and the vertical components represent thicknesses (t), of plate just perforable at those velocities. The co-ordinates will thus represent not the quantities in question but their logarithms.

If now a straight line can be drawn through the points so obtained the equation to the curve is monomial, and from the lengths of the co-ordinates we can determine the exponents of t and v.

Thus, if the horizontal co-ordinate (v) is 40 mm. in length and the vertical (t) is 80 mm., we know that $t \propto v^2$. Similar results with other calibres of gun should also be plotted and if a straight line can be drawn through the points so obtained, parallel to that first determined, we know that the relation between t and v holds for both calibres of projectile and probably for all others of the same type.

By similar means we can obtain the relation between any other pair of variables; thus, the striking energy may be kept constant and the relation between t and d determined.

The constants, which must be obtained by calculation, may or may not be the same for all calibres.

If, however, it is ascertained that approximately the same constant holds in each case, we will have obtained an empirical formula

$$v^n = \frac{t^x d^y}{w^z} \text{K}.$$

Some formulas, however, such as Tresidder's formula for the perforation of wrought-iron, apart from the constant, have been constructed from purely theoretical considerations and have been found to give results in accordance with actual experiment.

The following formulas are useful.

They are given in both English and metric units, the following being the notations employed:—

English.	Metric.
v = striking velocity in feet per second.	v = striking velocity in metres per second.
t = normal thickness of plate in inches.	e = normal thickness of plate in centimetres.
d = diameter of projectile in inches.	a = diameter of projectile in centimetres.
w = weight of projectile in pounds.	p = weight of projectile in kilogrammes.

Digitized by Google

Name of formula.	Armour.	English Units.	Metric Units.
Tresidder	Wrought iron ..	$v^3 = \frac{t^2 d}{w} \times \log^{-1} 8{\cdot}8410$	$v^3 = \frac{e^2 a}{p} \times \log^{-1} 5{\cdot}7352$
de Marre	Mild steel ..	$v = \frac{t^{0{\cdot}7} d^{0{\cdot}75}}{w^{0{\cdot}5}} \times \log^{-1} 3{\cdot}0094$	$v = \frac{e^{0{\cdot}7} \times a^{0{\cdot}75}}{p^{0{\cdot}5}} \times \log^{-1} 1{\cdot}7847$
Davis ..	Harveyed steel (1899 and 1900)	$v^2 = \frac{t^{1{\cdot}5} d}{w} \times \log^{-1} 6{\cdot}6900$	$v^2 = \frac{e^{1{\cdot}5} a}{p} \times \log^{-1} 4{\cdot}3026$
Krupp ..	Krupp cemented (K.C.) steel ..	$v^2 = \frac{t^2 d}{w} \times \log^{-1} 6{\cdot}3532$	$v^2 = \frac{e^2 a}{p} \times \log^{-1} 3{\cdot}7634$
A Russian (Vickers)	Krupp cemented (K.C.) steel ..	$v^2 = \frac{t^{1{\cdot}4} d^{1{\cdot}5}}{w} \times \log^{-1} 6{\cdot}3954$	$v^2 = \frac{e^{1{\cdot}4} a^{1{\cdot}5}}{p} \times \log^{-1} 3{\cdot}8460$

All the above formulas are for uncapped A.P. shot striking normally.

For oblique impact up to 30°, substitute $t \sec \theta$ for t, θ being the angle of incidence.

A very fairly accurate rough rule for arriving at the thickness of Krupp armour perforable by uncapped A.P. shot (under service conditions, *i.e.*, with striking velocity less than 2000 f/s.), may be obtained by reducing the formula given above to a simpler form.

Divide each side of the equation $t^2 = \frac{wv^2}{d} \times \frac{1}{\log^{-1} 6{\cdot}3532}$ by d^2 and we get

$$\frac{t^2}{d^2} = \frac{w}{d^3} v^2 \times \frac{1}{\log^{-1} 6{\cdot}3532}.$$

Now make $\frac{w}{d^3}$ constant and $= 0{\cdot}46$ and we obtain, on simplifying, $\frac{t}{d} = \frac{v}{2200}$, which is about right for 6″ projectiles against a 6″ K.C. plate and gives a margin in favour of the gun in the case of the larger calibres.

There is no generally accepted formula for capped A.P. shot against Krupped or Harveyed plates, though Davis' formula

$$t^{1{\cdot}6} = \frac{wv^2}{d} \times \frac{1}{\log^{-1} 6{\cdot}5061}$$ has been used in America.

A fairly satisfactory rough rule within the ordinary range of striking velocities is $\frac{t}{d} = \frac{v}{1950}$.

In all cases, however, either for capped or uncapped projectiles, it will be found more satisfactory to use Tresidder's wrought-iron formula in conjunction with a suitable figure of merit.

Digitized by Google

Examples:—

(1) What thickness of K.C. armour would you expect an uncapped 6″ A.P. shell (w = 100 lbs.) to perforate with striking velocities of 1600 f/s. and 2300 f/s.? Use Krupp's K.C. formula and assume that an uncapped A.P. shell has five-sixth the penetrative power of an uncapped A.P. shot.

v.	1600.	2300.
$\log v$	3·2041	3·3617
$2 \log v$	6·4082	6·7234
$\log w$	2·0000	2·0000
$k = \log (\log^{-1} \bar{7}\cdot6469)$	$\bar{7}\cdot6469$	$\bar{7}\cdot6469$
$\log wv^2k$	2·0551	2·3703
$\log d$	0·7782	0·7782
$\log t_1^2$	1·2769	1·5921
$\log t_1$	0·6384	0·7960
t_1	4·35	6·25
t	3·63	5·21

(2) At what ranges will capped 9·2″ (w = 380 lbs.) and 7·5″ (w = 200 lbs.) A.P. shell get through a 7″ K.C. plate respectively? Take the muzzle velocity in each case as 2750 f/s.

Answer—

9·2″ ... 6,000 yards approximately.
7·5″ ... 4,000 „ „

(3) What figures of merit are implied in the answers to example (2)?

Digitized by Google

LOGARITHMIC CHART SHOWING THE PERFORATION OF WROUGHT IRON & MILD STEEL ARMOUR & THE PUNCHING OF K.C. ARMOUR ACCORDING TO THE FORMULAS OF TRESIDDER, DE MARRE & KRUPP.

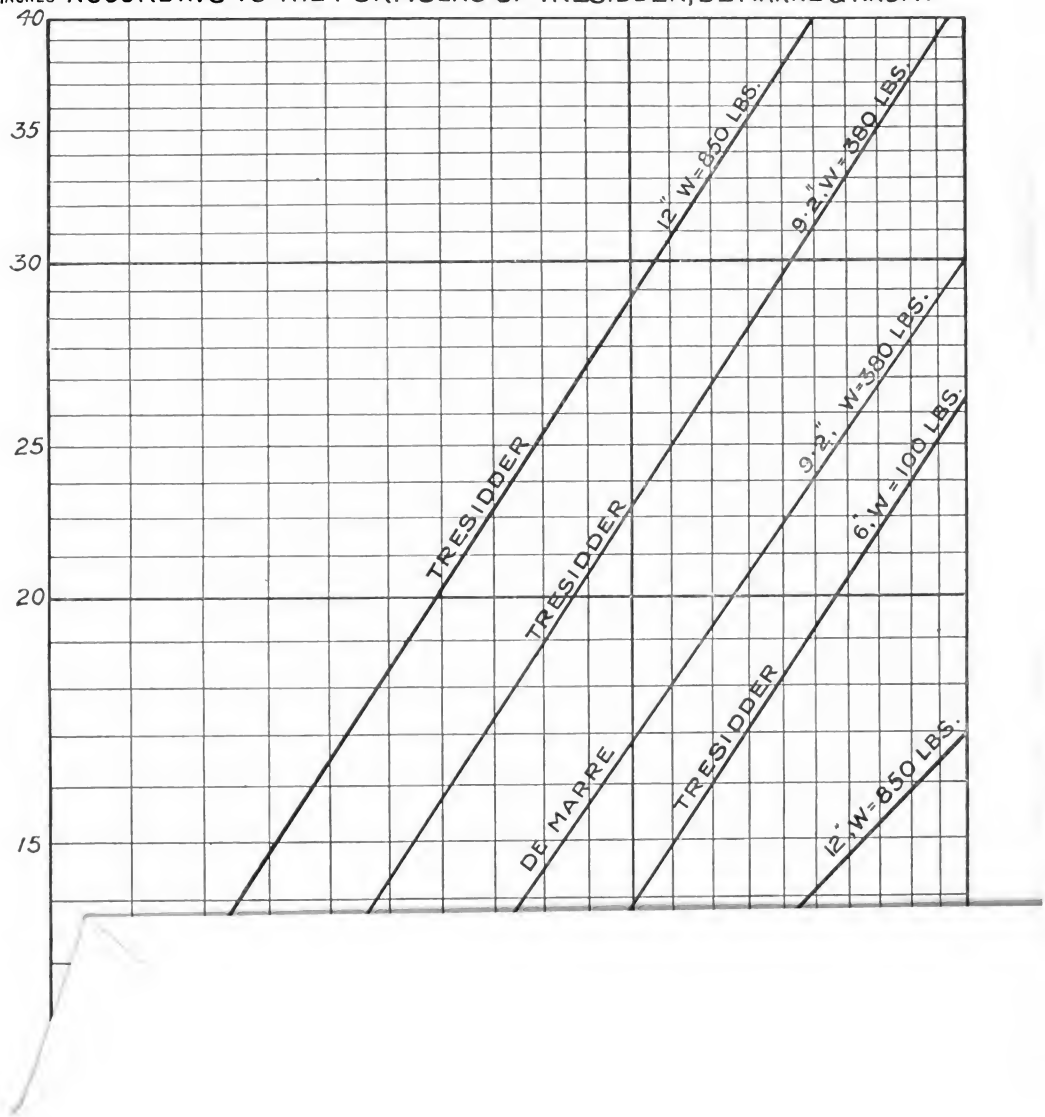

Digitized by Google

Digitized by Google

INDEX.

A.

	PAGE
Abel, Sir F., investigations of	123
Accuracy of fire	72, 91
Air, resistance of	8
Altitude function	19
Angle of arrival	4
„ deflection, permanent	76
„ departure	3
„ depression	3
„ descent	4
„ incidence	4
„ projection	4
„ rifling	184
„ sight	3
„ tangent elevation	3
Angles, quadrant	3
Angular velocity, measurement of	4
„ of rotation	186
Answers to ballistic problems	45
Applications of the ballistic tables	20
Arc, curvature of	217
Armour	242–247
„ penetration formulas	22, 38, 246
Automatic sights	85
Axis of piece, the	3
„ trunnions, the	3

B.

Ballistic coefficient of projectile	12
Ballistics, exercises on exterior	23, 24
„ exterior, notation and formulas	20
„ interior	112
„ pendulum of Benjamin Robins	8, 137
„ problems, answers to	45
„ construction of tables	12
Bar and drum sight	81
Barlow curves, definition of, &c.	153
Barr Stroud range finder	89
Boulengé chronograph	128
„ „ adjusting the instrument	132
Boys, Professor C.V., F.R.S., photograph of bullet in flight	11
Browne, Captain C. Orde, on armour, rough rule	22

C.

Calculation of muzzle velocity	28
Calibre	3
„ foreign guns, rule for value in inches	7
Carriages, jump, how counteracted	144–150
„ strains on firing and recoil	143
Chronograph, Bashforth's	8
„ Boulengé	128–136
Chronoscope, Noble's	116
Clinometer for laying	81
Coast Artillery	81

Digitized by Google

PAGE

Coefficient, ballistic 12
„ of reduction 11, 28, 50
„ „ shape 11
„ „ steadiness 11
„ „ tenuity 11
Commutator, the, Boulengé Chronograph 132
Compilation of range tables 46
Compression 6
Construction of ballistic tables 13, 14, 16, 19
Coppers, pressed, for crusher gauges 120, 121
Cordite, work by expansion of gases 126, 127
Correcting fraction for hardness or softness, table of 119
Correction of fire for loss of muzzle velocity 34
Crusher gauges, description and use 118
„ points to be attended to when using 119
Curves, hoop tension 153
„ Barlow 153
„ of energy 115
„ „ frequency or probability 95
„ „ radial pressure 153
„ „ velocity 115, 119
„ „ buffer recoil 146

D.

Dangerous space, the 5
Definitions and units 3
Deflection, correction of 78, 79
„ permanent angle of 76
„ wind, investigation and rules for 188–191
Degree table, Niven's 16
Density, gravimetric 122
„ of the air, standard 11
Departure, line of 3
„ plane of 3
Deviation 91, 110, 111
Difference of level in wheels, rule for correction 76
Disjunctor, the 132
Displacement 89
Drift 3, 72, 188
„ angle 95
„ effect of, in rifled guns 72

E.

Effect, factor of 127
Ehrhardt system of recoil 148
Elasticity, limit of 6
„ modulus of 6
Energy, measurement of 113
„ of rotation 114
„ striking 22
Error, mean lateral 92
„ longitudinal 92
„ vertical 92
Exercises on exterior ballistics 23
Experiments, ballistic pendulum, Benjamin Robins' 8
„ „ Hutton's 8
„ „ Nobel and Abel 123, 125
„ Newton's, resistance of air 8
Explosion vessel 123, 124
Extension 6
Exterior ballistics, notation and formulas 204

Digitized by Google

PAGE

F.

Factors, probability, table of 94
Figure of merit of ammunition for small arms 109, 110, 111
Fire, accuracy and range of 91
„ causes of inaccuracy.. 91
„ direct 19, 23
„ high angle formulas 21, 57
„ probability of 56, 93
Firing stress 158, 162, 174
„ on carriage and slide 140
„ „ guns 158
Foot-pound, the unit of work 112
Foot-ton, the 112
Force, definition and unit of 6
Forces acting on a gun carriage 140
Formulas and notation of exterior ballistics 20, 21

G.

Galton's, Sir F., Quicunx 95
Gauge, crusher 118
Gravimetric density 122
„ volume 123
Greenhill's formula 187
Grooves, uniform and increasing twist 182
Group difference 90
Gun charge, the how expressed 123
„ construction, principles of 151
„ „ wire 170
„ the strains of.. 168
Gunmakers' formula 157
Gunnery tables 193

H.

Hadcock, Mr. A. G. 20, 146, 187
Height of gun above mean tide level 83, 86
High angle fire formulas 21, 57
Hutton's experiments on resistance of the air 8

I.

Impact, point of mean 92
Inaccuracy of fire, chief causes of 91
Increasing twist 182
Independent line of sigth.. 81
Indicator diagram, the 115
Ingalls, Captain J. H., U.S.A. 44, 46
Initial stress, or stress of repose 158, 161, 175
Interior Ballistics 112-125
Investigation, *re* table of work for different expansions, cordite .. 126, 127

J.

Jump 4, 47

K.

Knot 77

L.

Laying 72
„ direct and indirect.. 80
Level of wheels, difference, rule for correction 76

Digitized by Google

PAGE

Limit of elasticity 6
Line of departure 3
„ sight 3
Linear velocity of rotation 186
Liner, cracked in guns, effect of 168
Longitudinal tension in the gun 179

M.

Magazine rifle bullet 25, 29
Mallock's arrangement for Ballistic pendulu n 137
Mean deviation, right 92
„ impact, point of 92
„ lateral error 92
„ longitudinal error 92
„ range.. 92
„ tide level, height of a gun 84, 87
„ trajectory 92
„ vertical error 92
Measurement of velocity 128
Measures, foreign, British equivalents 233, 234
Metric units 7
Modulus of elasticity 6
Motion of a projectile, unresisted 68–71
Musket pendulum for small arms 137, 138
Muzzle velocity 6

N.

Newton's experiments on resistance of air 8
Niven, W. D., F.R.S., ballistic table called degree table 16
Niven's method 210
Noble, Sir Andrew, experiments *re* cordite 123, 125
„ „ „ chronoscope 116
„ „ „ twist in guns 184, 185
Normal chamber pressure.. 162

O.

Ordnance Committee, rules of, for gun construction 155, 172

P.

Parabola 70, 71
Parabolic theory 68
„ twist strains muzzle of guns 184
Pendulum, ballistic 8, 137
„ musket, the, for small arms.. 137
Permanent angle of deflection 75
Personal error in laying 80
Pitch of Rifling 114
Planes of sight and departure 3
Point blank 74
„ of half time 17, 18
„ „ mean impact 92
Powder stresses 158, 164, 173
Practice report 47, 49
Pressed coppers for crusher gauges 119
Pressure 6
„ working, ... 162
Pressures on recoil in a horizontal plane 140
„ „ „ vertical plane 140

Digitized by Google

PAGE

Principles of gun construction 151
Probability curve 95
„ factors, table of 94
„ of fire, examples 102–109
Problems, ballistic 23–44
„ „ answers to 45
Pseudo-velocities 21

Q.

Quadrant angle, the 3
„ depression 83
Quadratic law of resistance 8
Quincunx, Galton's, to imitate curve of error 95

R.

Radian, the unit of circular measure 4
Radius of gyration 113
Range 3
„ and accuracy of fire 91
„ mean 92
„ tables, how compiled 46
„ „ correction of, for a loss of muzzle velocity 34
„ „ 4·7-inch Q.F. and 6-inch B.L. VII 62–67
Recoil 139
„ compression of springs in controlling 144
„ modern system 145
„ 18-pr. Q.F. 149
Reduced distance 15
„ time 15
Remaining velocity 6
Resistance of the air 8, 195
„ to shearing 180
Rheostats in Boulengé chronograph 132
Rifling of guns 182
„ twist, how estimated, &c. 154, 184
Rigby, experiments on drift 188
Rules of perforation 22, 39

S.

Shoeburyness 46
Sight, angle of 3
„ automatic 85–88
„ bar and drum 80
„ straight edge, tangent 83
Sites, high, firing from 107
Small arms ammunition 110, 111
Stability of rotation of projectiles, table for 187
Standard density of the air 11
Strain 6
„ horizontal, on recoil 142
„ of the gun 168
Strength of guns 151
Stress 6
„ firing, initial, and powder 158
„ in the material of a gun 152
„ on gun carriages, and recoil 139
Striking velocity 6

T

Table for stability of rotation of projectiles, Greenhill's formula, by Cundill and Hadcock 187
Tables, ballistic, application of the .. ..

	PAGE
Tables, probability factors	94
„ range, how compiled	46
Tabular, or reduced, distance	15
Target, moving, laying and firing at	78
Tenacity	4
Tension	6
Tenuity correction at great altitudes	51
Theory of range finding	89
Tide corrections	84, 87
Trajectory	3
„ mean	92
„ parabolic, geometrical investigation of	68
Trigger of Boulengé chronograph	131
Twist of rifling, uniform and gaining, how estimated	184

U.

Uniform twist of grooves in guns	184
„ „ work lost by friction, less than with gaining twist	185
Units and definitions	3
„ „ of force	6
„ „ „ length	7
Units and Definitions of metric	7
„ „ „ weight	7
„ „ „ work	112
Unresisted motion of a projectile, the	68

V.

Velocity, change in	34
„ curve, the	119
„ muzzle	6, 28, 47
„ of recoil, empirical formula for	143
„ „ rotation, angular	114, 186
„ „ „ linear	186
„ measurement of	128
„ pseudo	21
„ remaining	6
„ striking	6

W.

Want of level	76
Watkin's position finders	73
Wind	138
„ deflection	138
Wire gun construction	170
Work	112
„ graphical representation of	112
„ measurement of	112
„ unit of	112
Working pressure	162

Z.

Zone, breadth the, and 50 per cent.	93
„ height, the	93
„ length, the	93
Zones, the probable, of fire	93

Digitized by Google

MILITARY BOOKS, published by Authority—continued.

LAW. MILITARY. Manual of. 1899. Price 2*s.*
MEDICAL SERVICES. ARMY. Regulations for. 1900. Price 9*d.*
MEDICAL SERVICES. ARMY. Advisory Board for. Treatment of Venereal Diseases and Scabies. First Report. Price 1*s.* 6*d.* Second Report. 1905. Price 2*s.*
MEDICAL CORPS. ARMY. Manual. 1904. Price 9*d.*
,, **Extract from.** Sec. II. Drills and Exercises. 1903. Price 3*d.*
,, **Regns. for Admission to.** May, 1902. Price 1*d.*
MEDICAL CORPS AND QUEEN ALEXANDRA'S IMPERIAL MILITARY NURSING SERVICE. Standing Orders. 1903. Price 1*s.*
MEKOMETER. Handbook. 1904 Price 6*d.*
POSITION-FINDER. Handbook. 1904. Price 3*d.*
RANGE-FINDER. Depression. Land Service. 1904. Price 4*d.*
RANGE-FINDING. Field. With Watkin's Field Range-finder and Telemeter. Handbook. 1903. Price 6*d.*
BASHFORTH CHRONOGRAPH. Report on Experiments with. (1870.) Price 1*s.*
RAILWAYS DURING THE WAR IN SOUTH AFRICA, 1899-1902. Price 4*s.*
SADDLES AND COLLARS, SORE BACKS AND SORE SHOULDERS. A Manual of. By Veterinary Major Fred. Smith, Army Veterinary Department. Third Edition. 1897. Price 1*s.*
SCOUTS. Training and Use of. Price 2*d.*
SEWAGE. Practical Treatment of. Price 6*d.*
SIGNALLING REGULATIONS. 1904. Price 9*d.*
DO. Extract from. SEMAPHORE SIGNALLING. Price 1*d.*
SMALL ARMS. Text Book. 1904. Price 2*s.* 6*d.*
TELEGRAPHS IN WAR. Regulations for Working. Price 1*d.*
TELEGRAPHY. ARMY. Manual of Instruction in Field Telegraphs. Price 3*s.*
TELESCOPIC SIGHTS. Land Service. Handbook. 1904. Price 4*d.*
TRACTOR TRIALS AT ALDERSHOT, 1903. Report on. Price 6*d.*
TRANSPORT MANUAL. (Field Service.) Part I. 1905. (Provisional.) Price 4*d.*
ROYAL MILITARY ACADEMY. ADMISSION TO. Regns. respecting. 1904. Price 1*d.*
ROYAL MILITARY COLLEGE. Ditto. Price 1*d.*
ROYAL MILITARY COLLEGE: Syllabus of the Course of Instruction at. 1900. Price 3*d.*
STAFF COLLEGE. Regulations respecting the. 1905. Price 2*d.*
TERRITORIAL REGIMENTS OF THE BRITISH ARMY. Nos. 1 to 67. Short Histories of. Price 1*d.* each, or the whole bound in one volume, price 5*s.*
VETERINARY DEPARTMENT. Admission to. Regns. 1905. Price 1*d.*

MILITARY EXAMINATION PAPERS, viz.:—
ENTRANCE. Nov.-Dec. 1904. Price 1*s.*
R.M. Academy (Fourth Class) and R.M. College (Fourth Division). Dec., 1904. Price 1*s.*
Staff College. Admission August, 1904. Price 1*s.*
Militia and Imperial Yeomanry. Competitive and Qualifying. March, 1905. Price 1*s.*
Foreign Languages. Modern. Officers of the Army. Oct., 1903. Price 1*s.*
Regular Forces, Militia, Yeomanry, and Volunteers. Nov., 1904. Price 1*s.*

SCHOOLS. ARMY:—
Regulations. 1903. Price 4*d.*
Inspectors of, &c., &c. Standing Orders for. 1900. Price 4*d.*
Singing in Regns. for Teaching. 1901. Price 1*d.*
Technical Terms and Words of Frequent Occurrence in Army Orders, Lists of 1904. Price 2*d.*
Type Exercises from Regimental Orders or use of Candidates for 3rd class certificates. Price 3*d.*
WAR ON LAND. The Laws and Customs of, as defined by the Hague Convention. 1904. Price 6*d.*

Digitized by Google

WORKS

PREPARED BY THE GENERAL STAFF

AT THE

WAR OFFICE.

AFRICA, BRITISH EAST PROTECTORATE, AND ZANZIBAR. Précis of Information concerning. 1900. Price 3*s.*

CYPRUS. Compiled by Captain A. R. Saville, 18th Foot. 1878. Price 2*s.* 6*d.*

DUTCH ARMY (HOME AND COLONIAL). Handbook of the. 1896. Price 9*d.*

FRANCO-GERMAN WAR, 1870-71. Authorised Translation from the German Official Account by Major F. C. H. CLARKE, C.M.G., R.A.

FIRST PART:—*History of the War to the Downfall of the Empire.*

Vol. I.:—Sections 1 to 5. From the Outbreak of Hostilities to the Battle of Gravelotte. With case of Maps and Plans. Price 26*s.* (*Out of print.*)

Vol. II.:—Sections 6 to 9. From the Battle of Gravelotte to the Downfall of the Empire. With case of Maps and Plans. Price 22*s.* (*Out of print.*)

SECOND PART:—*History of the War against the Republic.*

Vol. I.:—Secs. 10 to 13. From the Investment of Paris to the re-occupation of Orleans by the Germans, with case of Maps and Plans. Price 26*s.*

Vol. II.:—Secs. 14 to 18. Events in Northern France from the end of November. In the North-west from the beginning of December. And the Siege of Paris from the commencement of December to the Armistice; the Operations in the South-east from the Middle of November to the Middle of January. (1883.) Price 26*s.*

Vol. III.:—Secs. 19 and 20. Events in South-east France from the Middle of January to the Termination of Hostilities. Rearward Communications. The Armistice. Homeward March and Occupation. Retrospect. 1884. Price 31*s.* 6*d.*

Analytical Index. By Colonel LONSDALE HALE. Price 1*s.* 6*d.*

Also separately, in paper covers:—

Section

1. The Events in July. Price 3*s.*
2. Events to the Eve of the Battles of Wörth and Spicheren. Price 3*s.*
3. The Battles of Wörth and Spicheren. 1882. Price 5*s.*
4. Advance of the Third Army to the Moselle, &c. Second edition, revised and corrected. With 1 Plan and 7 Sketches. Price 4*s.*
5. Operations near Metz on 15th, 16th, and 17th August. Battle of Vionville Mars-la-tour. Price 6*s.* 6*d.*
6. The Battle of Gravelotte—St. Privat. 5*s.* (*Out of print.*)
7. Advance against the Army of Chalons. Price 6*s.*
8. The Battle of Sedan. Price 3*s.* (*Out of print.*)
9. Proceedings on German Coast and before Fortresses in Alsace and Lorraine. General Review of War up to commencement of September. Price 4*s.* 6*d.*
10. Investment of Paris. Capture of Toul and Strasburg. Price 6*s.*
11. Events before Paris and at other Points. Price 5*s.* 3*d.*
12. Last Engagements with French Army of Rhine. 1878. Price 4*s.* 6*d.*
13. Occurrences on the Theatre of War in Central France up to the re-occupation of Orleans by the Germans. (1880.) Price 6*s.*
14. Measures for the Investment of Paris. Price 4*s.*

Digitized by Google

WORKS prepared by the General Staff—continued.

Franco-German War, 1870-71—*continued.*

Section
15. Measures for protecting Investment of Paris. (1880.) Price 2*s.* 6*d.*
16. Proceedings of the Second Army. Price 3*s.* 6*d.*
17. Proceedings of the First Army. Price 3*s.*
18. Occurrences on the South-Eastern Theatre of War up to the Middle of January, 1881. Price 8*s.*
19. Occurrences on the South-east Theatre of War. Price 13*s.* 6*d.*
20. General Retrospect of the War. The Results of the War. Price 5*s.*

FRENCH ARMY. Handbook. 1901. Price 1*s.*

GERMAN ARMY. Field Service Regulations. 1900. Price 6*d.*

GERMAN ARMY (HOME AND COLONIAL). Handbook. Second Edition. Price 1*s.* 6*d.*

GERMAN FIELD ARTILLERY. Drill Regns. By Major J. H. V. CROWE, R.A., Staff Captain. Price 1*s.* 6*d.*

GERMANY: Campaign of 1866 in. Compiled by the Department of Military History of the Prussian Staff. Price £1 1*s.*

HOSTILITIES WITHOUT DECLARATION OF WAR. By Bt. Lieut.-Col. J. F. MAURICE, R.M. 1883. Price 2*s.*

NILE AND COUNTRY BETWEEN DONGOLA, SUAKIN, KASSALA, AND OMDURMAN. Report on the. 1898. Price 4*s.* 6*d.*

RECONNAISSANCE IN LITTLE-KNOWN COUNTRIES. Hints on. By Captain C. E. CALLWELL, R.A., Staff Captain. Price 1*d.*

RHODESIA, SOUTHERN. Précis of Information concerning. By Major C. T. DAWKINS, C.M.G. Jan., 1899. Price 2*s.*

STAFF DUTIES IN THE FIELD. 1891. Price 3*s.*

SÛDAN ALMANAC. 1905. Price 1*s.*

SÛDAN CAMPAIGN. History of. In Two Parts, with Case of Maps. By Colonel H. E. COLVILLE, C.B., Gren. Guards. 1890. Price 15*s.*

SÛDAN. Handbook of the. Part I. Geographical. Part II. Historical. By Captain Count GLEICHEN, Grenadier Guards, D.A.A.G. 1898. Price 2*s.*

DITTO. SUPPLEMENT. July, 1899. Price 2*s.* 6*d.*

SÛDAN, RED SEA, AND EQUATOR. REPORT ON THE EGYPTIAN PROVINCES OF THE. July, 1884. Price 3*s.* 6*d.*

SURVEYS (GOVERNMENT) OF THE PRINCIPAL COUNTRIES. NOTES ON. 1882. Price 6*s.*

DITTO. SUPPLEMENT TO. A Guide to Recent Large Scale Maps, including both Surveys and Compilations, together with a List of Some Large Sheet Atlases. By A. KNOX, M.A. Price 5*s.* 6*d.*

SWEDEN AND NORWAY. Handbook. 1901. Price 1*s.* 6*d.*

SWISS ARMY. Handbook. 1898. Price 6*d.*

TACTICS, MODERN. Précis of. Originally Compiled by Colonel R. HOME, C.B., R.E., and revised and re-written by Lt.-Colonel Sisson Pratt. 1892. Price 4*s.* 6*d.*

UGANDA PROTECTORATE. Précis of Information concerning. 1902. Price 5*s.* 6*d.*

VALPARAISO. THE CAPTURE OF IN 1891. Report on. Price 1*s.*

WAR GAME. On a Map. Conduct of. Rules for the. 1899. Price 3*d.*

WAR ON LAND. LAWS AND CUSTOMS OF. Price 6*d.*

ZULULAND. Précis of Information concerning. With Map. 1894. Price 4*s.*

Digitized by Google